Global Traffic Technologies

Installation Manual **February 2008**

Opticom™ Infrared System

Model 752E Phase Selector
Model 754E Phase Selector
Model 760E Card Rack
Model 759 Auxiliary Interface Panel

Table of Contents

1 About This Manual

1.1 Purpose of Manual

This manual provides step-by-step instructions for installing and setting-up the Opticom™ Infrared System Model 752E and 754E Phase Selectors*. It is intended for use by installers, maintenance personnel, and others who are responsible for the installation and maintenance of the system.

1.2 Manual Conventions

The conventions listed in Table 1-1 help to make this manual easier to use by presenting a uniform approach to the descriptions, phrases, and nomenclature.

Table 1-1. Manual Conventions

Element	Convention	Example
Acronyms	Uppercase	LED
Abbreviations	Lowercase …except where standard usage is uppercase	ms (milliseconds) Mb (megabits) MB (megabytes) dB (decibel)
Model names	First or formal reference: initial caps Subsequent use or informal reference: Initial caps for *Model*, lowercase for remainder	Opticom™ Infrared System Model 752E and 754E Phase Selectors Model 752E and 754E phase selectors, or the phase selectors
Signal name	Initial caps	the Disable signal
Switch position	Uppercase	select position R

*The method of using the components of the Opticom™ System may be covered by US Patent number 5172113

1.3 Related Publications

The *Opticom™ Infrared System Model 711, 721, 722 Detector Installation Instructions*.

1.4 Manual Organization

This manual is divided into 10 sections.

Section 1. About This Manual
Contains information about the organization and content of this manual.

Section 2. Safety Information
Contains important information about the safety messages, safety labels, safety precautions, and procedures for installation of this device.

Section 3. Description
Briefly describes the Model 752E and 754E phase selectors and their related Opticom components.

Section 4. Features
Describes important features and characteristics of the phase selectors.

Section 5. Installation
Contains step-by-step installation instructions.

Section 6. Communication Networks
Contains information about serial communication.

Section 7. Setup
Describes the indicators and switches on the phase selectors.

Section 8. Checkout
Contains information and procedures on how to check out and test the installed system.

Section 9. Troubleshooting
Contains tests and problem solutions to troubleshoot the installed system.

Section 10. Maintenance
Contains information and recommendations to ensure reliable system operation.

2 Safety Information

We provide important safety information and warnings to assist you in understanding and avoiding potential harm to yourself, and possible damage to equipment, during the installation of the Opticom™ Infrared system equipment. Although we have included many potential hazards you may encounter during the installation of this equipment, we cannot predict all of the possible hazards and this list should not be a substitute for your judgment and experience.

Please read and observe all safety information and instructions in this manual before installing the system equipment. Also, save this installation manual and keep it near the equipment.

If you are unsure about any part of this installation or of the potential hazards discussed, please contact your supervisor immediately.

2.1 Intended Use

The system is intended to assist authorized priority vehicles through signalized intersections by providing temporary right-of-way through vehicle operator interface to the system and through the use of common traffic controller functions.

2.2 Technical Support

If you have questions about the system, its use, or operation, please call the Global Traffic Technologies Technical Service department at: 1-651-789-7333; or in the US at: 1-800-258-4610.

2.3 Safety Messages and Safety Labels

We include safety messages and labels in this manual to help you protect your safety and the safety of others. This section contains important information to help you recognize and understand these safety messages.

Please read these messages before proceeding with the installation.

2.3.1 Safety Message Format

Safety messages are designed to alert you to potential hazards that can cause personal injury to you or others. They can also indicate the possibility of property damage.

Each safety message box contains a safety alert symbol (⚠); one of three signal words: DANGER, WARNING, or CAUTION; and a safety message.

The signal words and symbols, and their meanings, are shown below:

⚠ DANGER
The safety message is in this box.

DANGER means you and/or someone else WILL be KILLED or SERIOUSLY HURT if you do not follow these instructions.

⚠ WARNING
The safety message is in this box.

WARNING means you and/or someone else MAY be KILLED or SERIOUSLY HURT if you do not follow these instructions.

⚠ CAUTION
The safety message is in this box.

CAUTION means you and/or someone else MAY be HURT or property damage may result if you do not follow these instructions.

In addition to the symbols and words explained above, each safety message identifies the hazard, describes what you can and should do to avoid the risk of exposure to the hazard, and tells the probable consequences of not avoiding the hazard.

2.3.2 Safety Label Format

We include safety labels on the devices to help you protect your safety and the safety of others. Safety labels are designed to alert you to potential hazards associated with a piece of equipment that can cause personal injury to you or others. They can also indicate the possibility of property damage.

Please read all safety labels.

Each safety label contains a safety alert symbol, (⚠); one of three signal words: DANGER, WARNING, or CAUTION; a pictorial showing the nature of the hazard; and a safety message.

The signal words and symbols, and their meanings, are shown below:

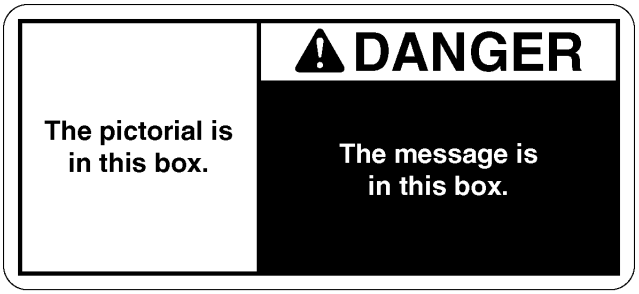

Opticom-242A

DANGER means you and/or someone else WILL be KILLED or SERIOUSLY HURT if you do not follow these instructions.

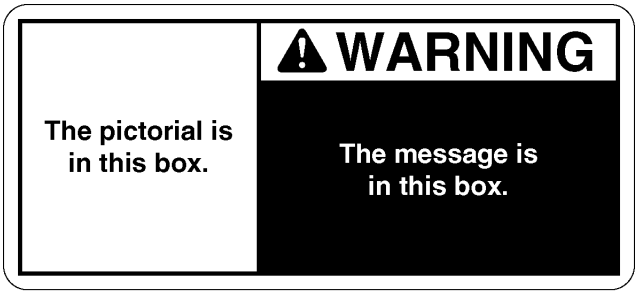

Opticom-243A

WARNING means you and/or someone else MAY be KILLED or SERIOUSLY HURT if you do not follow these instructions.

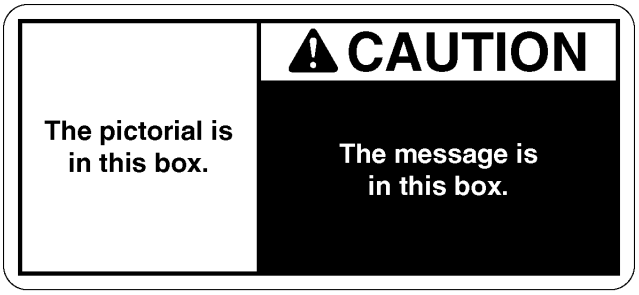

Opticom-244A

CAUTION means you and/or someone else MAY be HURT or property damage may result if you do not follow these instructions.

We consider safety labels to be an important part of all devices and they should be replaced immediately if they become hard to read.

If any of the safety labels are missing, or cannot be read, please contact your dealer or the GTT repair department for a replacement.

2.4 Safety Messages Contained in this Manual

The following safety messages appear in this manual:

⚠ WARNING

This procedure may expose you to AC voltage and the risk of electric shock or electrocution. **Turn off the AC mains and use accepted and recognized safety precautions to avoid exposure to the risk of electric shock or electrocution.** Electric shock may cause severe injury or death.

⚠ WARNING

Improper or incomplete programming of the traffic controller may cause improper operation of the traffic signals, which may result in accidents and/or injuries. **To avoid this problem, verify that the operation of the traffic controller is appropriate for your needs before, during, and after actuation of the priority control inputs.** Improper operation of the traffic signals may result in unsafe driver action.

⚠ WARNING

Improper wiring of the detector may cause improper operation of the traffic control system, which may result in accidents and/or injuries. **To avoid the risk of accidents and/or injuries, each detector must be connected to the detector power source and power return of the same phase selector to which it supplies a signal.** Improper operation of the traffic control system may result in unsafe driver action.

⚠ WARNING

Connecting more than one detector signal wire to a detector input terminal may damage the detectors and may cause improper operation of the input circuitry, which may result in accidents and/or injuries. **To avoid this problem, connect only one detector signal wire to each detector input terminal.** Improper operation of the traffic control system may result in unsafe driver action.

⚠ CAUTION

Connect Terminals TB1-7 and TB1-8 of the card rack to earth ground to allow dissipation of static charges on the detector cable. **Failure to connect Terminals TB1-7 and TB1-8 to earth ground may damage the equipment.** If detectors have been mounted but not connected to the phase selector, strip insulation from each detector cable and connect all the wires to earth ground until the installation can be completed.

⚠ CAUTION

Connect Terminal DET PWR GND of the auxiliary interface panel to earth ground to allow dissipation of static charges on the detector cable. **Failure to connect Terminal DET PWR GND to earth ground may damage the equipment.** If detectors have been mounted but not connected to the phase selector, strip insulation from each detector cable and connect all the wires to earth ground until the installation can be completed.

⚠ WARNING

A completed installation that is not tested may result in improper system operation, which may result in accidents and/or injuries. **To avoid this problem, test the system to verify proper operation.** Improper system operation may result in unsafe driver action.

2.5 Safety Label Location

There is one safety label on the devices included in this manual. If it is missing or cannot be read, please contact your dealer or the Global Traffic Technologies repair department for a replacement. See Figure 2-1 for the safety label location.

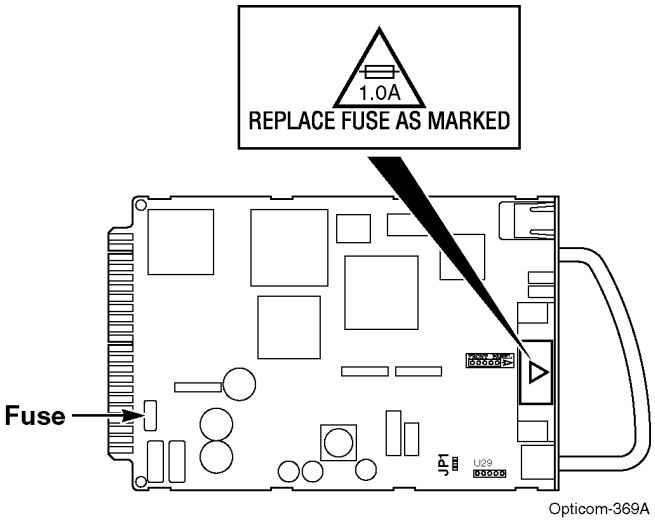

Figure 2-1. Phase Selector Safety Label Location

2.6 Safety Considerations

Please consider the following safety issues before beginning the installation.

Although we have compiled this list of common safety considerations, it should not be considered as complete. It is not intended to take the place of your good judgment, training, and experience.

2.6.1 Personal Safety Equipment and Clothing

Personal safety equipment and clothing including high visibility vests, hard hats, gloves, electrical shock or electrocution protection clothing and equipment, safety shoes, safety glasses, face shields, goggles, and hearing protection devices are just some of the items available to you.

Choose the right equipment for the job. If you are unsure of which safety equipment is recommended or appropriate for the job, ask your supervisor or foreman.

2.6.2 Work Zone Traffic Control

Proper control of vehicle traffic is important during many procedures. When you switch the traffic controller to and from the flash mode we recommend that you have people trained in manual traffic control, such as police officers, assist you.

When you install devices that require you to position vehicles, equipment, or people in or near the roadway; it is important that you use appropriate work zone traffic control techniques, equipment, and procedures. Sometimes you may have to work on or near the roadway and these same techniques, equipment, and procedures should be used for your protection.

If you are unsure of which procedures are recommended or appropriate for the job, ask your supervisor or foreman.

2.6.3 Electric Shock

The possibility of electrical shock exists when installing Opticom™ Infrared System equipment, since connections must be made to open terminals within the traffic control cabinet which may have 220 – 240 VAC present. Follow proper work procedures and read and understand the safety messages in this manual.

As a trained installer of electrical equipment you are aware of the dangers associated with installation of electrical devices. Always be sure that the power to the equipment, and all associated equipment, is turned off before beginning any procedure. Use the equipment, techniques, and procedures that you learned during your training or apprenticeship or other electrical industry recognized safety procedures.

If you are unsure of which techniques, procedures, and protective equipment are recommended or appropriate for the job, ask your supervisor or foreman.

2.7 Disposal of Device

Please dispose of the device in accordance with all local and federal laws and regulations.

3 Description

This section provides a general description of the Opticom™ 700 series system and a detailed description of the Model 752E and 754E phase selectors.

3.1 Opticom 700 Series System

The system assists authorized priority vehicles through signalized intersections by providing temporary right-of-way through the use of common traffic controller functions. The 700 series system records and communicates information (for example, vehicle location, travel direction, user class and identification) and provides traffic flow information by measuring rate of movement of designated Probe vehicles.

The 700 series system consists of the following matched components:

- **Emitter** — Model 792 Emitter.
- **Detector** — Model 711, 721, and 722 Detectors and the Model 739 Detector Cable. Also Model 759 Auxiliary Interface Panels, if auxiliary detectors and/or green sense inputs are used.
- **Phase Selector** — Model 752E and 754E Phase Selectors.
- **Card Rack** — Model 760E Card Rack.

The emitter, with an appropriate emitter control switch, is mounted on the priority vehicle. It generates a series of pulses in the infrared and visible wavelengths. These pulses are sensed by the detector mounted at the intersection.

The detector converts the infrared energy into electrical signals that are transmitted by the detector cable to the phase selector in the traffic controller cabinet.

The phase selector discriminates between valid emitter signals and other sources of energy received by the detectors, and activates its outputs in response to valid priority emitter signals. The phase selector outputs are connected to the traffic controller's inputs, to request the traffic controller to deliver the desired green for the priority vehicle.

The card rack provides the power and logic wiring for the phase selector, which plugs directly into a slot in the unit.

3.2 Model 752E and 754E Phase Selectors

The Model 752E phase selector is a plug-in two channel, dual priority, encoded signal device. The Model 754E phase selector is a plug-in four channel, dual priority, encoded signal device. Both phase selectors are designed for use with Model 792 emitters and Model 711, 721, and 722 detectors.

A Model 760E card rack is required for installation of the phase selector. The phase selector is powered by 24 VDC and contains its own internal power supply to support the detectors.

The Opticom™ Infrared System Model 752E and 754E Phase Selectors recognize and discriminate between three distinct emitter frequency rates via detectors. Within each of these three frequency rates they further discriminate among 10 classes of vehicle identification codes, with 1000 individual vehicle codes per class—10,000 total per frequency rate.

Each channel output delivers a constant output for high priority activation and a pulsed output for low priority activation. A high priority signal received on either channel will override any low priority activation.

The probe frequency does not place a call request, but does log vehicles by ID number when they are in range.

This manual describes the installation of a Model 760E card rack and the installation of a Model 752E or 754E phase selector into the card rack.

Figure 3-1 shows the phase selector installation components including the phase selectors, card rack, auxiliary interface panel, and the wiring harness and cables. The 9-pin harness connects the card rack to the traffic controller. The communication cable connects the phase selector to a modem or PC. The auxiliary interface panel cable connects the phase selector to the auxiliary interface panel.

NOTE

Illustrations and connections to the controller may not be exactly as shown or described in this manual. Refer to the controller wiring diagram for correct terminal connections.

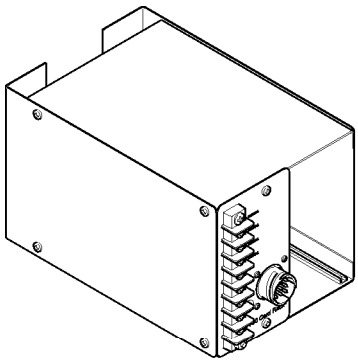

Model 760E Card Rack

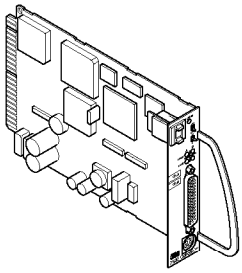

Model 752E
Phase Selector

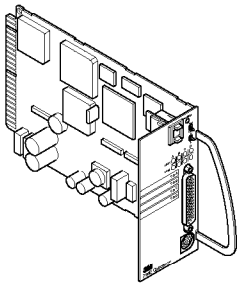

Model 754E
Phase Selector

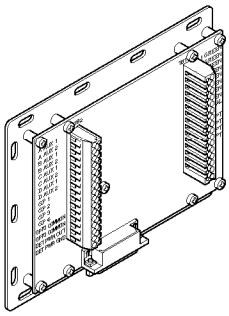

Model 759
Auxiliary Interface Panel

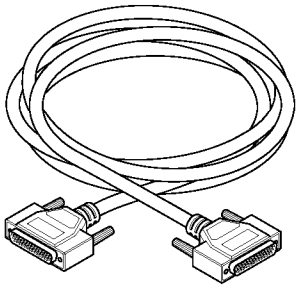

Auxiliary Interface
Panel Cable

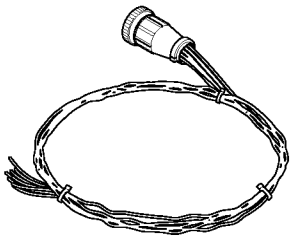

9-Pin Harness

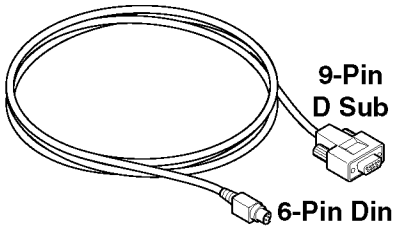

Communication Cable

Opticom-370A

Figure 3-1. Phase Selector Installation Components

4 Features

The Opticom™ Infrared System Model 752E and 754E Phase Selectors have the following features:

- Compatible with both encoded signal and non-encoded signal systems
- High and Low priority, and Probe vehicle discrimination
- First come, first served priority within each priority level
- Signal intensity threshold (range) can be automatically set using an encoded emitter
- User-settable range for a minimum operating range of 2500 feet (760 meters)
- Easily installed
- Compatible with most traffic controllers
- Computer-based user interface
  - RS-232 communication port
  - Customizable signal intensity thresholds
  - Customizable ID code validation
  - Customizable timing parameters
  - Detailed current system parameter information
  - History log of most recent activities (1000 entries)
- 30,000 frequency/vehicle class/vehicle code ID combinations
- Front panel switches and diagnostic indicators for testing
- Erasable, write-on pads for phase or movement labeling

5 Installation

This section includes:

- Installing Model 760E card rack. See Section 5.1.
- Installing Model 752E and 754E phase selectors. See Section 5.2.
- Wiring for Model 739 detector cable. See Section 5.3.
- Wiring for Model 711, 721, and 722 detectors installed as primary detectors. See Sections 5.4 and 5.5.
- Installing Model 759 auxiliary interface panel. See Section 5.6.
- Wiring for auxiliary detectors. See Section 5.7.
- Wiring for clock reset feature. See Section 5.8.
- Wiring for green sense. See Section 5.9.
- Cabling for remote communication. See Section 5.10.
- Pin index for edge connectors of the phase selectors. See Section 5.11.

5.1 Card Rack Installation

Card slot X1 in the Model 760E card rack is dedicated to a phase selector. The X1 edge connector is wired to connector J1 on the card rack front panel, which is connected (through the 9-pin harness) to the traffic controller. The phase selector, through X1, supplies two or four outputs to the traffic controller (Model 752E or 754E phase selectors, respectively).

⚠ WARNING

Improper or incomplete programming of the traffic controller may cause improper operation of the traffic signals, which may result in accidents and/or injuries. **To avoid this problem, verify that the operation of the traffic controller is appropriate for your needs before, during, and after actuation of the priority control inputs.** Improper operation of the traffic signals may result in unsafe driver action.

The outputs from the phase selector are connected to the preemption inputs of the traffic controller. Each phase selector output must be connected to a separate controller preemption input. Consult the manual for your controller to determine if the preemption inputs are handled with the same priority. For some traffic controllers, preemption inputs one and two are intended for railroad and draw bridge preemption and are given precedence over the rest of the preemption inputs.

When programming your priority control routines, it is important to use values that will allow the traffic controller to respond to a priority control request as quickly and safely as possible. If the routines are not programmed to respond quickly enough, the requesting vehicle may not receive a green light in time to travel through the intersection safely.

⚠ WARNING

This procedure may expose you to AC voltage and the risk of electric shock or electrocution. **Turn off the AC mains and use accepted and recognized safety precautions to avoid exposure to the risk of electric shock or electrocution.** Electric shock may cause severe injury or death.

1. Place the Opticom™ Infrared System Model 760E Card Rack at the desired location in the controller cabinet.
2. Locate the controller terminals for chassis ground, logic ground, and the priority control inputs.

NOTE

Power the phase selector with a separate 24 VDC power supply regulated to ±5%. Do not use the controller cabinet power supply. The supply should provide at least 1 amp.

3. Route the 9-pin harness wires to their terminals.
4. Strip 7 mm of insulation from each wire to be used.
5. Install a spade lug on each wire and connect it to the appropriate terminal. See Figure 5-1 and Table 5-1.
6. Tape off and cable tie all unused wires.
7. Connect plug P1 of the 9-pin harness to connector J1 on the Model 760E card rack front panel.

Table 5-1. 9-Pin Harness Wiring

Wire Color	Pin Number	Function
Red	1	+24 VDC
Black	2	24 VDC ground
Green	3	Chassis ground
	4	Not used
Gray/White	5	Ch A priority control output
Blue/White	6	Ch B priority control output
Violet/White	7	Ch C priority control output
Brown/White	8	Ch D priority control output
Gray/Black	9	Logic ground

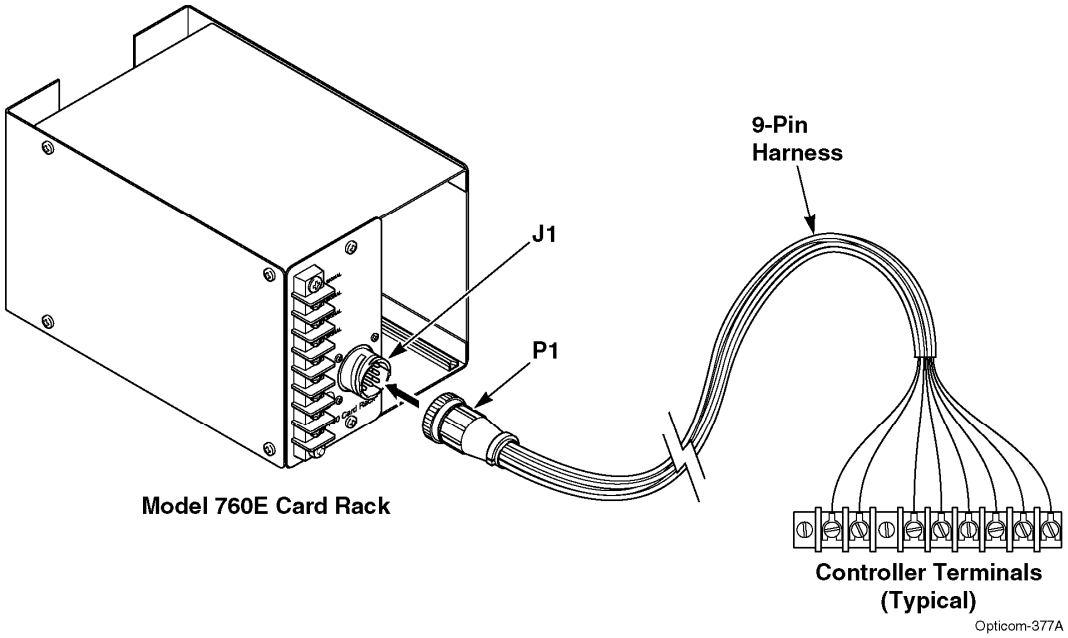

Figure 5-1. 9-Pin Harness Wiring

5.2 Phase Selector Installation

NOTE

A writing area is provided on the front of the 752E and 754E phase selectors to record the phases or approach called by each channel.

⚠ WARNING

Improper or incomplete programming of the traffic controller may cause improper operation of the traffic signals, which may result in accidents and/or injuries. **To avoid this problem, verify that the operation of the traffic controller is appropriate for your needs before, during, and after actuation of the priority control inputs.** Improper operation of the traffic signals may result in unsafe driver action.

1. Set the power switch on the front panel of the phase selector to OFF.
2. Install the phase selector into the Model 760E card rack making sure it is fully seated. See Figure 5-2.

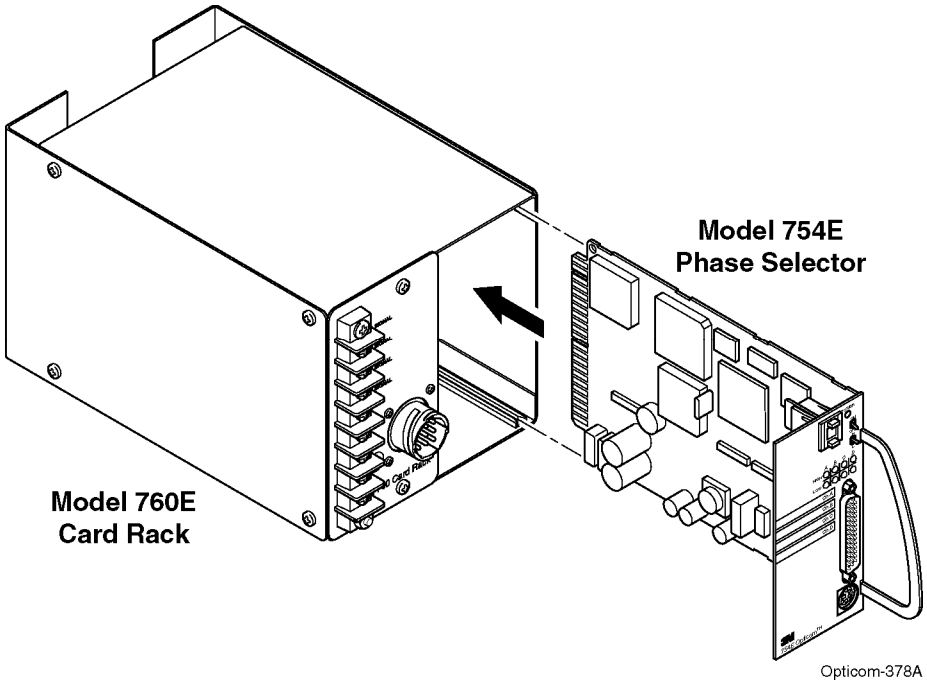

Figure 5-2. Phase Selector Installation

5.3 Detector Cable Wiring (Detector End)

GTT provides two models of Opticom™ Infrared System detector cables.

- The Model 739 detector cable is a four-conductor cable with yellow, orange, blue, and green conductor wires. It also has a bare shield drain wire.
- The Model 138 detector cable is a three-conductor cable with yellow, orange, and blue conductor wires. It also has a bare shield drain wire.

The Model 739 detector cable is required in countries with CE requirements. The green conductor is required to meet CE grounding requirements. GTT recommends that the Model 739 detector cable always be used with Model 752E and 754E phase selectors.

All detector wiring diagrams and descriptions is this manual describe the use of the Model 739 detector cable. The installation instructions for the Model 711, 721, and 722 detectors describe the use of the Model 739 detector cable as well as the Model 138 detector cable.

.

The Model 711, 721, and 722 detectors have a four-position terminal strip located behind the wiring access door in the base of the detector.

1. Open the wiring access door by removing the two screws on either side of the door. Allow the door to hang by its tether.
2. Cut off 5 cm of outer jacket from the Model 739 detector cable, which is already routed to the inside of the detector housing. Remove the shield with the outer jacket. Also cut off the bare wire. See Figure 5-3.
3. Strip 7 mm of insulation from the yellow, orange, blue, and green wires.
4. Install a spade lug on each of the yellow, orange, blue, and green wires.
5. Connect the wires as shown in Figure 5-4. (A similar illustration is located on the inside of the detector door for reference.)

   The yellow wire carries the signal from the tube nearest the detector base. For Model 722 detectors, the blue wire carries the signal from the tube nearest the detector cap.
6. Store all excess wire in the base of the detector.
7. Close the wiring access door and replace the two screws on either side of the door. Tighten the screws.

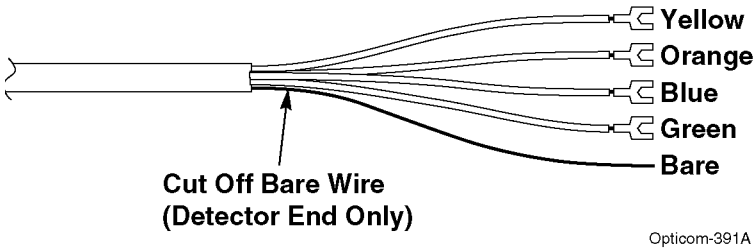

Figure 5-3. Model 739 Detector Cable Preparation

Note: Shown for normal, upright mount applications. Take care to obtain correct connections for *inverted* mount applications.

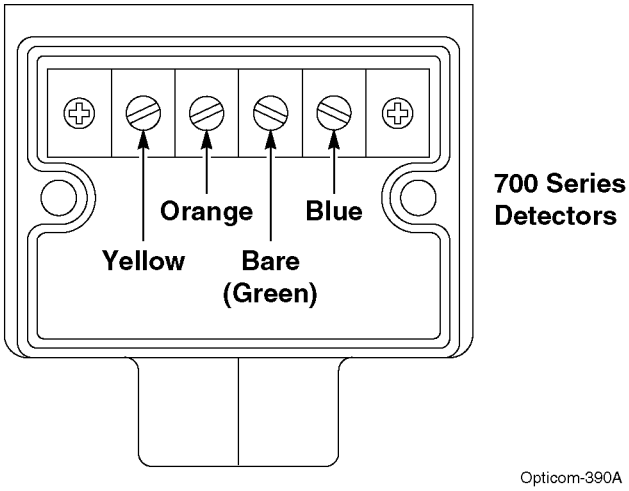

Figure 5-4. Model 739 Detector Cable Connections to Terminal Strip

5.4 Primary Detector Connection for Single Channel

The Opticom™ Infrared System Model 711 or 721 Detector must already be installed at the intersection and the Model 739 detector cable routed into the controller cabinet.

⚠ WARNING

Improper wiring of the detector may cause improper operation of the traffic control system, which may result in accidents and/or injuries. **To avoid the risk of accidents and/or injuries, each detector must be connected to the detector power source and power return of the same phase selector to which it supplies a signal.** Improper operation of the traffic control system may result in unsafe driver action.

1. Route the detector cable to the Model 760E card rack. Allow an extra 15 cm of cable for making connections.
2. Cut off 15 cm of outer insulation and shield from the end of the detector cable.
3. Strip 7 mm of insulation from the yellow, orange, blue, and green wires.
4. Twist the bare ends of the blue and green wires together.
5. Install a spade lug on each of the following wires: yellow, orange, blue/green pair, and bare.
6. Insulate the bare wire with electrical tape to prevent it from shorting to other wiring. See Figure 5-5.
7. Connect the bare wire to the threaded terminal at the bottom of the terminal strip. See Figure 5-6.

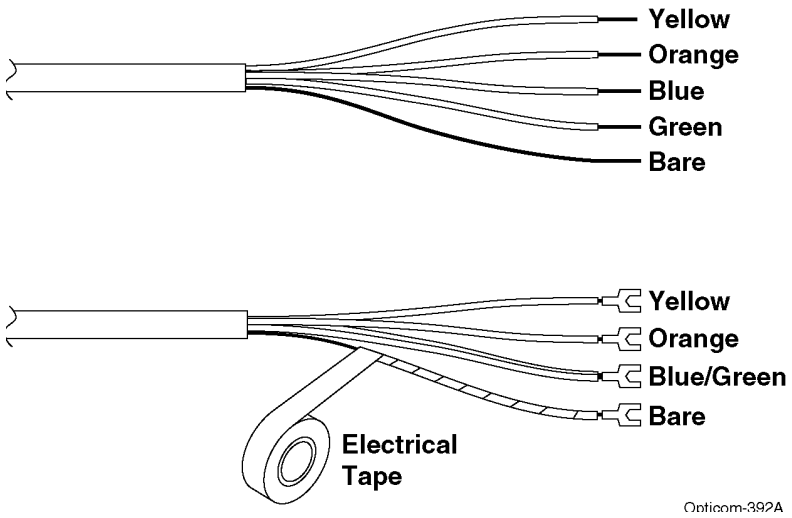

Figure 5-5. Detector Cable Preparation for Single Channel

⚠ WARNING

Connecting more than one detector signal wire to a detector input terminal may damage the detectors and may cause improper operation of the input circuitry, which may result in accidents and/or injuries. **To avoid this problem, connect only one detector signal wire to each detector input terminal.** Improper operation of the traffic control system may result in unsafe driver action.

8. Connect the yellow wire to one of the channel terminals listed below (see Figure 5-6):

   Channel A — TB1-1 (CH 1 Signal)
   Channel B — TB1-2 (CH 2 Signal)
   Channel C — TB1-3 (CH 3 Signal)
   Channel D — TB1-4 (CH 4 Signal)

9. If the yellow wire is connected to channel A or B, connect the orange wire to TB1-5,6 (DC+). For channel C or D, connect the orange wire to TB1-5,6 (DC+).

10. If the yellow wire is connected to channel A or B, connect the blue/green pair to TB1-7,8 (DC–). For channel C or D, connect the blue/green pair to TB1-7,8 (DC–).

⚠ CAUTION

Connect Terminals TB1-7 and TB1-8 of the card rack to earth ground to allow dissipation of static charges on the detector cable. **Failure to connect Terminals TB1-7 and TB1-8 to earth ground may damage the equipment.** If detectors have been mounted but not connected to the phase selector, strip insulation from each detector cable and connect all the wires to earth ground until the installation can be completed.

11. Connect a wire from TB1-7 and TB1-8 (DC–) to earth ground.

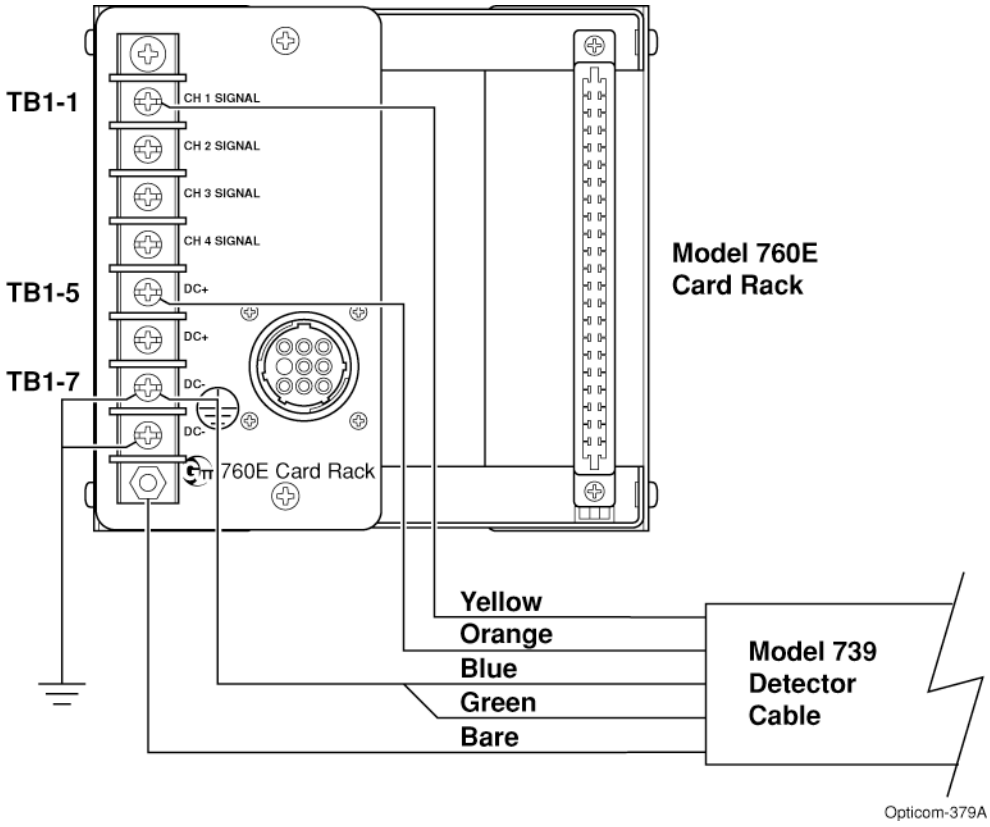

Figure 5-6. Detector Connections for Single Channel

5.5 Primary Detector Connection for Dual Channel

The Opticom™ Infrared System Model 722 Detector must already be installed at the intersection and the Model 739 detector cable routed into the controller cabinet.

⚠ WARNING

Improper wiring of the detector may cause improper operation of the traffic control system, which may result in accidents and/or injuries. **To avoid the risk of accidents and/or injuries, each detector must be connected to the detector power source and power return of the same phase selector to which it supplies a signal.** Improper operation of the traffic control system may result in unsafe driver action.

1. Route the detector cable to the Model 760E card rack. Allow an extra 15 cm of cable for making connections.
2. Cut off 15 cm of outer insulation and shield from the end of the detector cable.
3. Strip 7 mm of insulation from the yellow, orange, blue, and green wires.
4. Install a spade lug on each of the following wires: yellow, orange, blue, green, and bare. See Figure 5-7.
5. Insulate the bare wire with electrical tape to prevent it from shorting to other wiring.
6. Connect the bare wire to the threaded terminal at the bottom of the terminal strip. See Figure 5-8.

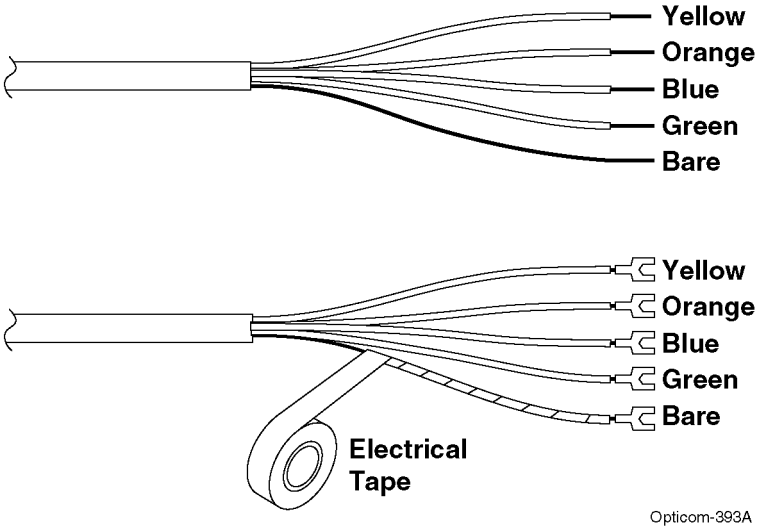

Figure 5-7. Detector Cable Preparation for Dual Channel

⚠ WARNING

Connecting more than one detector signal wire to a detector input terminal may damage the detectors and may cause improper operation of the input circuitry, which may result in accidents and/or injuries. **To avoid this problem, connect only one detector signal wire to each detector input terminal.** Improper operation of the traffic control system may result in unsafe driver action.

NOTE

The blue wire is the signal from the Model 722 detector tube furthest from the detector base, while the yellow wire is the signal from the tube closest to the detector base.

7. Connect the yellow wire to one of the channel terminals listed below (see Figure 5-8):

   Channel A — TB1-1 (CH 1 Signal)
   Channel B — TB1-2 (CH 2 Signal)
   Channel C — TB1-3 (CH 3 Signal)
   Channel D — TB1-4 (CH 4 Signal)

8. Connect the blue wire to the channel not being used by the yellow wire (channel A or B, or channel C or D).
9. For channels A and B, connect the orange wire to TB1-5 (DC+). For channels C and D, connect the orange wire to TB1-6 (DC+).
10. For channels A and B, connect the green wire to TB1-7 (DC–). For channels C and D, connect the green wire to TB1-8 (DC–).

⚠ CAUTION

Connect Terminals TB1-7 and TB1-8 of the card rack to earth ground to allow dissipation of static charges on the detector cable. **Failure to connect Terminals TB1-7 and TB1-8 to earth ground may damage the equipment.** If detectors have been mounted but not connected to the phase selector, strip insulation from each detector cable and connect all the wires to earth ground until the installation can be completed.

11. Connect a wire from TB1-7 and TB1-8 (DC–) to earth ground.

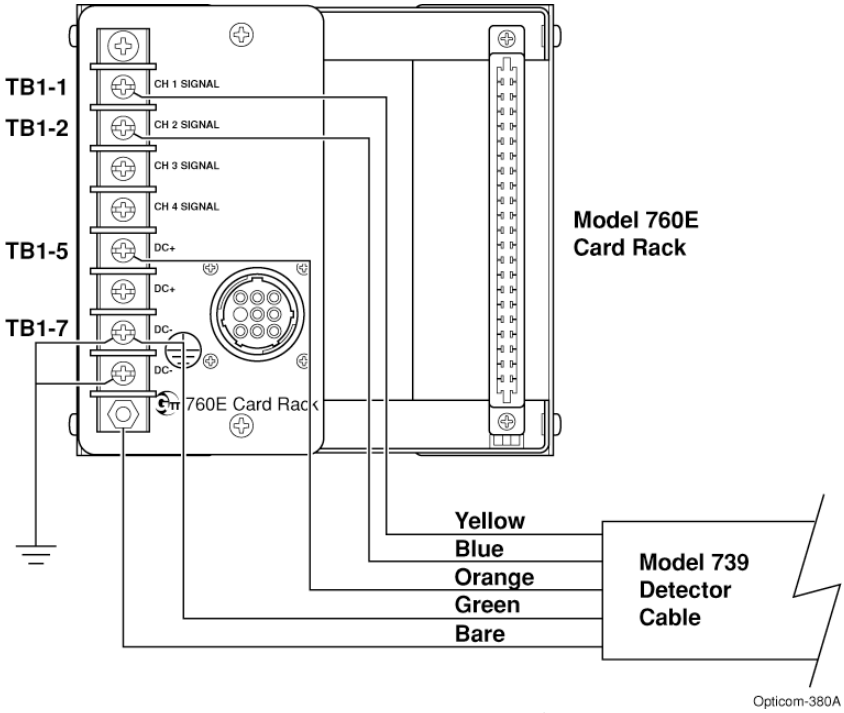

Figure 5-8. Detector Connections for Dual Channel

5.6 Auxiliary Interface Panel Installation

The Opticom™ Infrared System Model 759 Auxiliary Interface Panel is a terminal block assembly designed for easy connections between the Model 752E or 754E phase selector and the traffic control cabinet wiring. This assembly is required for the following:

- Installations requiring auxiliary detectors
- Green sense inputs

NOTES

Wire gauges from 22 to 16 AWG may be used to connect from the auxiliary interface panel to the traffic control cabinet wiring. Use wire with a sufficient voltage rating.

All of the auxiliary interface panel terminals may not be used in any given installation.

⚠ WARNING

This procedure may expose you to AC voltage and the risk of electric shock or electrocution. **Turn off the AC mains and use accepted and recognized safety precautions to avoid exposure to the risk of electric shock or electrocution.** Electric shock may cause severe injury or death.

1. Install the auxiliary interface panel. See Figure 5-9.
   a) Determine a suitable location for the auxiliary interface panel in the traffic control cabinet.
   b) Use the mounting plate as a template and mark where you want to drill holes.
   c) Drill the holes and fasten the mounting plate to the interior wall using the appropriate fasteners.
2. Connect the auxiliary interface panel cable. See Figure 5-9.
   a) Connect one end of the auxiliary interface panel cable P1 to connector J1 on the front panel of the Model 752E or 754E phase selector.
   b) Connect the other end of the auxiliary interface panel cable P1 to connector J1 on the auxiliary interface panel.

The auxiliary interface panel is now ready for wiring connections to the traffic control cabinet.

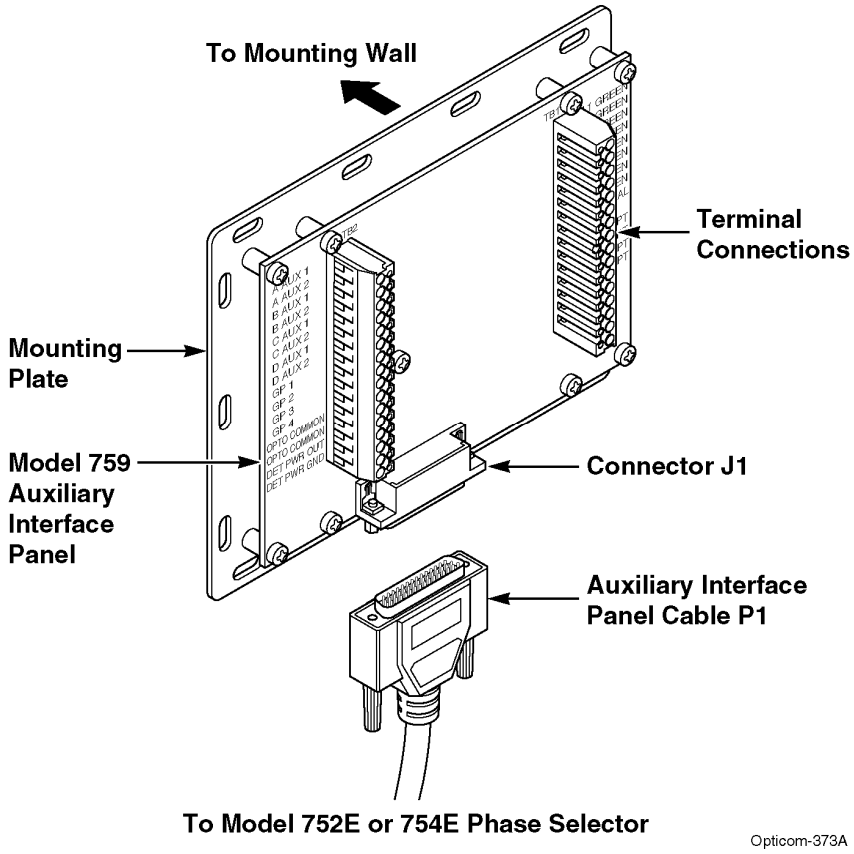

Figure 5-9. Auxiliary Interface Panel Installation

5.7 Auxiliary Detector Wiring

The Model 711, 721, or 722 detectors must already be installed in the intersection and the Model 739 detector cables must be routed to the traffic control cabinet.

⚠ WARNING

Improper wiring of the detector may cause improper operation of the traffic control system, which may result in accidents and/or injuries. **To avoid the risk of accidents and/or injuries, each detector must be connected to the detector power source and power return of the same phase selector to which it supplies a signal.** Improper operation of the traffic control system may result in unsafe driver action.

1. Strip sufficient outer insulation and shield from the detector cable(s) to allow wires to connect to the terminal block of the Model 759 auxiliary interface panel.
2. Strip 7 mm of insulation from the yellow, orange, blue, and green wires.
3. Insulate the bare wire with electrical tape to prevent shorting to other wiring. Leave 7 mm of bare wire sticking out. See Figure 5-10.

⚠ WARNING

Connecting more than one detector signal wire to a detector input terminal may damage the detectors and may cause improper operation of the input circuitry, which may result in accidents and/or injuries. **To avoid this problem, connect only one detector signal wire to each detector input terminal.** Improper operation of the traffic control system may result in unsafe driver action.

⚠ CAUTION

Connect Terminal DET PWR GND of the auxiliary interface panel to earth ground to allow dissipation of static charges on the detector cable. **Failure to connect Terminal DET PWR GND to earth ground may damage the equipment.** If detectors have been mounted but not connected to the phase selector, strip insulation from each detector cable and connect all the wires to earth ground until the installation can be completed.

4. Connect the bare wire to the auxiliary interface panel mounting plate. See Figure 5-11.
5. Connect the orange wire to the auxiliary interface panel terminal labeled DET PWR OUT. Tighten the terminal block screw.
6. For Model 711 or 721 detectors, make the following connections. See Figure 5-11.
   a) Connect both the blue and green wires to the auxiliary interface panel terminal labeled DET PWR GND. Tighten the terminal block screw.
   b) Connect a wire from DET PWR GND to earth ground.
   c) Connect the yellow wire to the desired auxiliary interface panel terminal. (For example, A AUX1 would be channel A auxiliary detector number 1.) Tighten the terminal block screw.

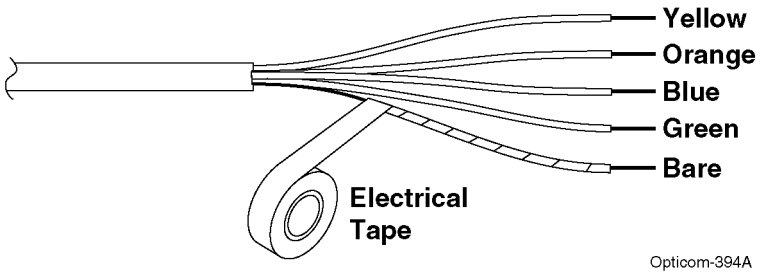

Figure 5-10. Auxiliary Detector Cable Preparation

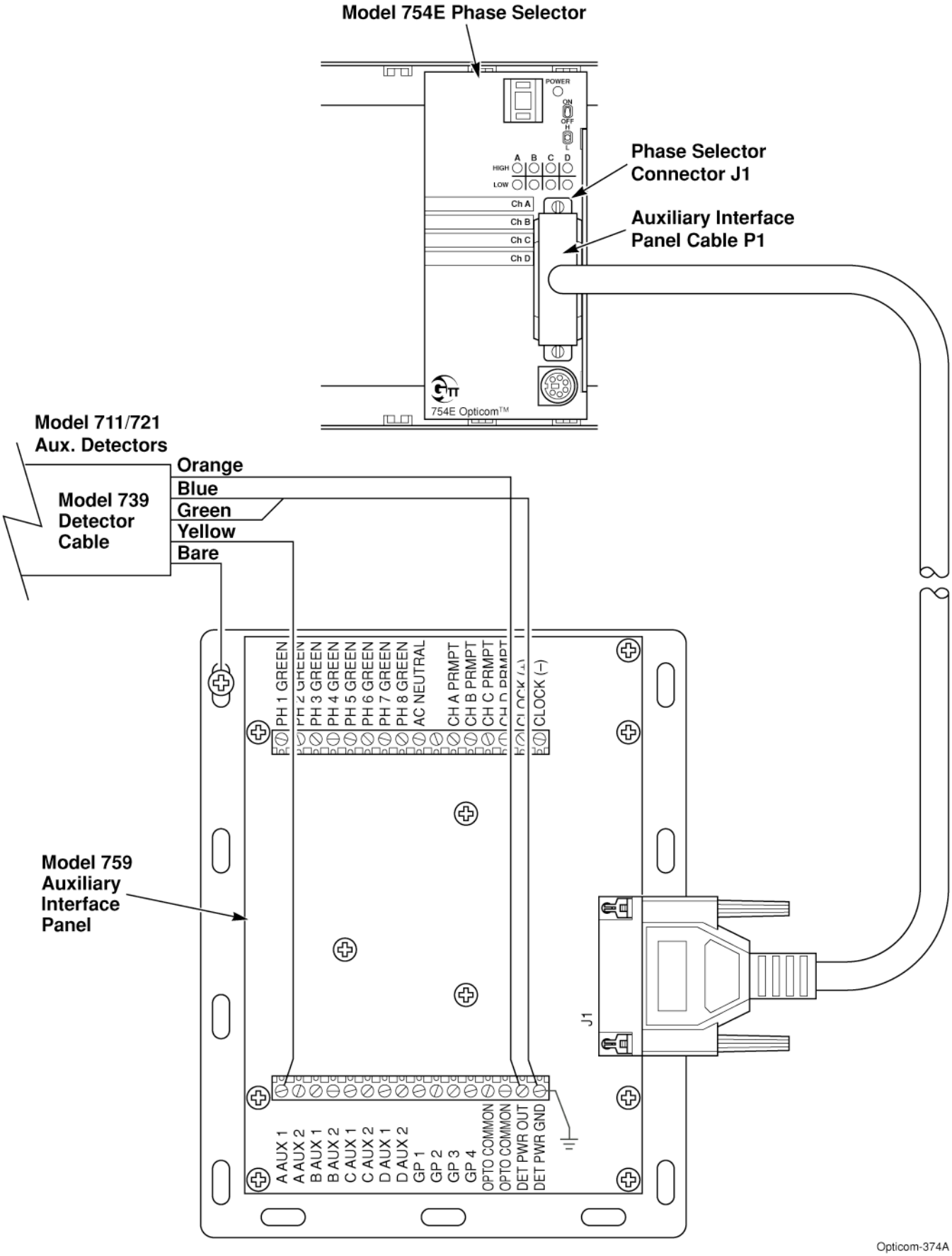

Figure 5-11. Auxiliary Detector Connections for Single Channel

⚠ WARNING

Connecting more than one detector signal wire to a detector input terminal may damage the detectors and may cause improper operation of the input circuitry, which may result in accidents and/or injuries. **To avoid this problem, connect only one detector signal wire to each detector input terminal.** Improper operation of the traffic control system may result in unsafe driver action.

7. For Opticom™ Infrared System Model 722 Detectors, make the following connections. See Figure 5-12.

   a) Connect the green wire to the Model 759 auxiliary interface panel terminal labeled DET PWR GND. Tighten the terminal block screw.

⚠ CAUTION

Connect Terminal DET PWR GND of the auxiliary interface panel to earth ground to allow dissipation of static charges on the detector cable. **Failure to connect Terminal DET PWR GND to earth ground may damage the equipment.** If detectors have been mounted but not connected to the phase selector, strip insulation from each detector cable and connect all the wires to earth ground until the installation can be completed.

   b) Connect a wire from DET PWR GND to earth ground.

   c) Connect the yellow wire to the desired auxiliary interface panel terminal. (For example, A AUX1 would be channel A auxiliary detector number 1.) Tighten the terminal block screw.

   d) Connect the blue wire to the desired auxiliary interface panel terminal. (For example, B AUX1 would be channel B auxiliary detector number 1.) Tighten the terminal block screw.

8. Check all wiring and connections.

9. Repeat steps 1 through 8 for any additional auxiliary detectors.

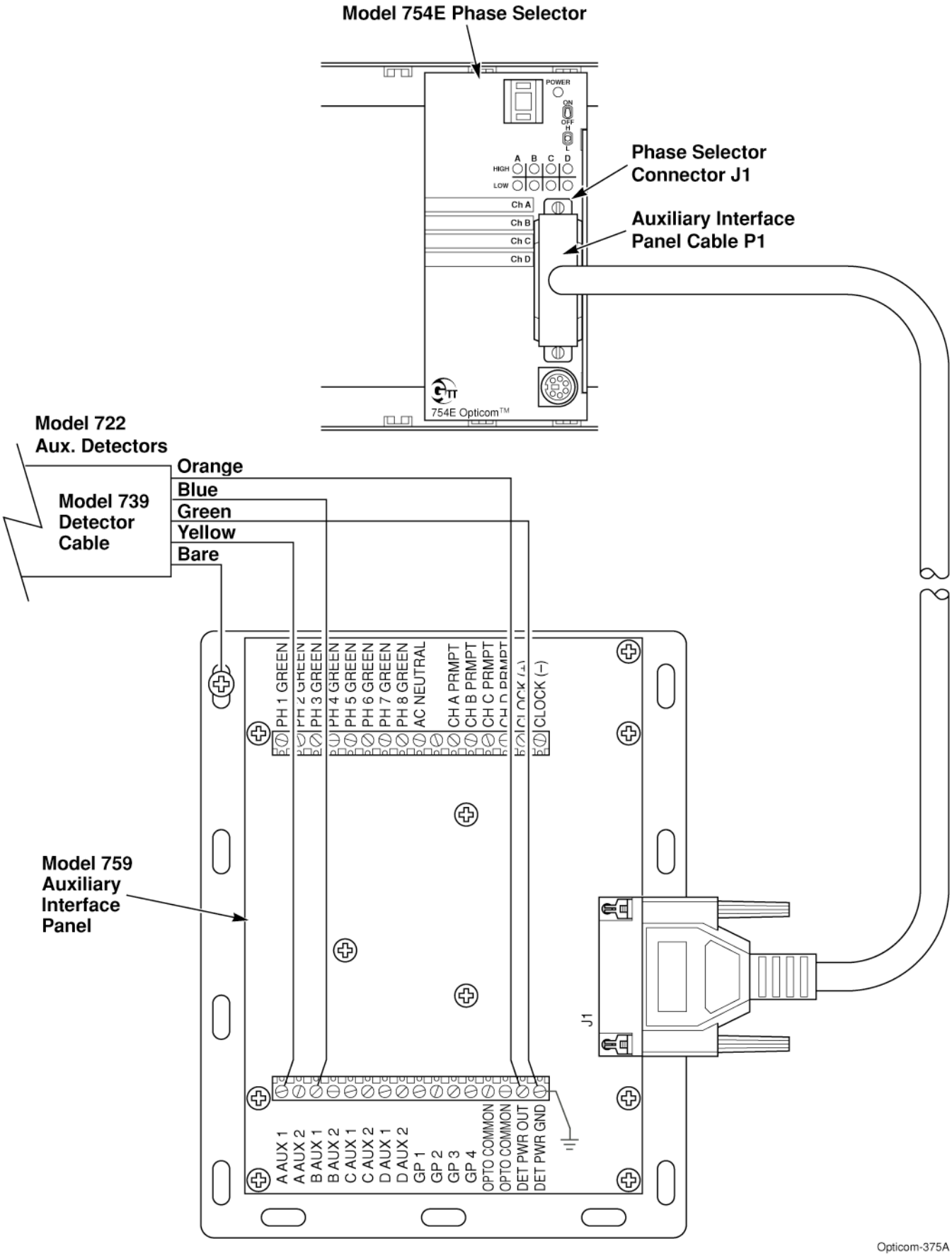

Figure 5-12. Auxiliary Detector Connections for Dual Channel

5.8 Clock Set Wiring

To ensure the accuracy of Opticom™ Infrared System Model 752E and 754E Phase Selector clocks, use the clock reset feature. Reset the clock by sending an external clock sync pulse from the controller or other source to the phase selector every day at 12:00 noon.

The clock sync pulse can be either a +24 VDC pulse of one-second duration, or a Ground pulse of one-second duration. See Figure 5-13.

1. Locate and identify the clock sync pulse terminals on the controller or other source in the traffic control cabinet.
2. Determine the appropriate length of wire to connect the Model 759 auxiliary interface panel to the clock sync pulse source terminals on the controller or other source.
3. Strip 7 mm of insulation from both ends of the wire being used.
4. Insert one end of the wire into the CLOCK (+) terminal of the auxiliary interface panel and tighten the terminal block screw. See Figure 5-14.
5. Route the wire through the traffic control cabinet to the clock sync pulse terminal on the controller or other source.
6. Insert the wire into the correct terminal and tighten the screw.
7. Repeat steps 2 through 6 for the CLOCK (–) terminal of the auxiliary interface panel.
8. Verify that your wiring is correct, and the connections are tight.
9. At the source, set the clock sync pulse to occur once each day at 12:00 noon for duration of one second. This will cause the clock to be reset to 12:00 noon.

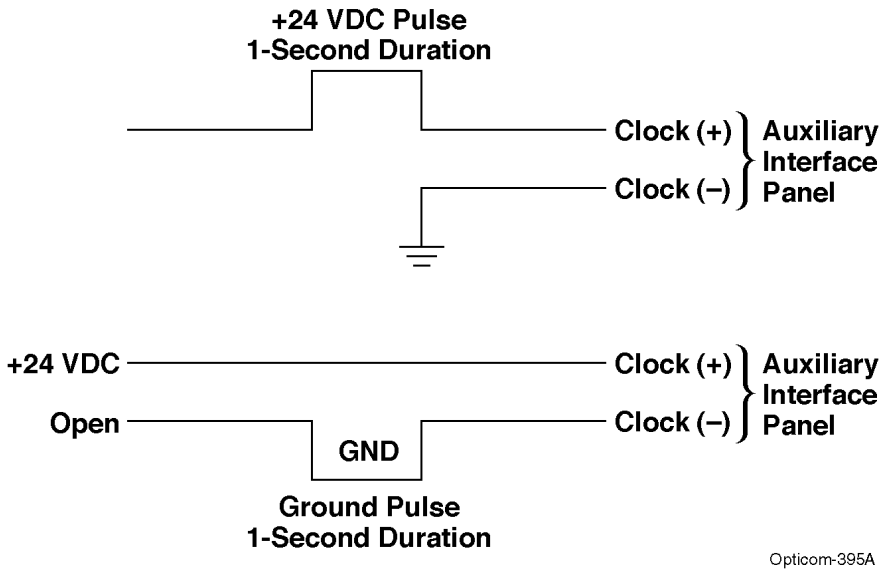

Figure 5-13. Clock Sync Pulse

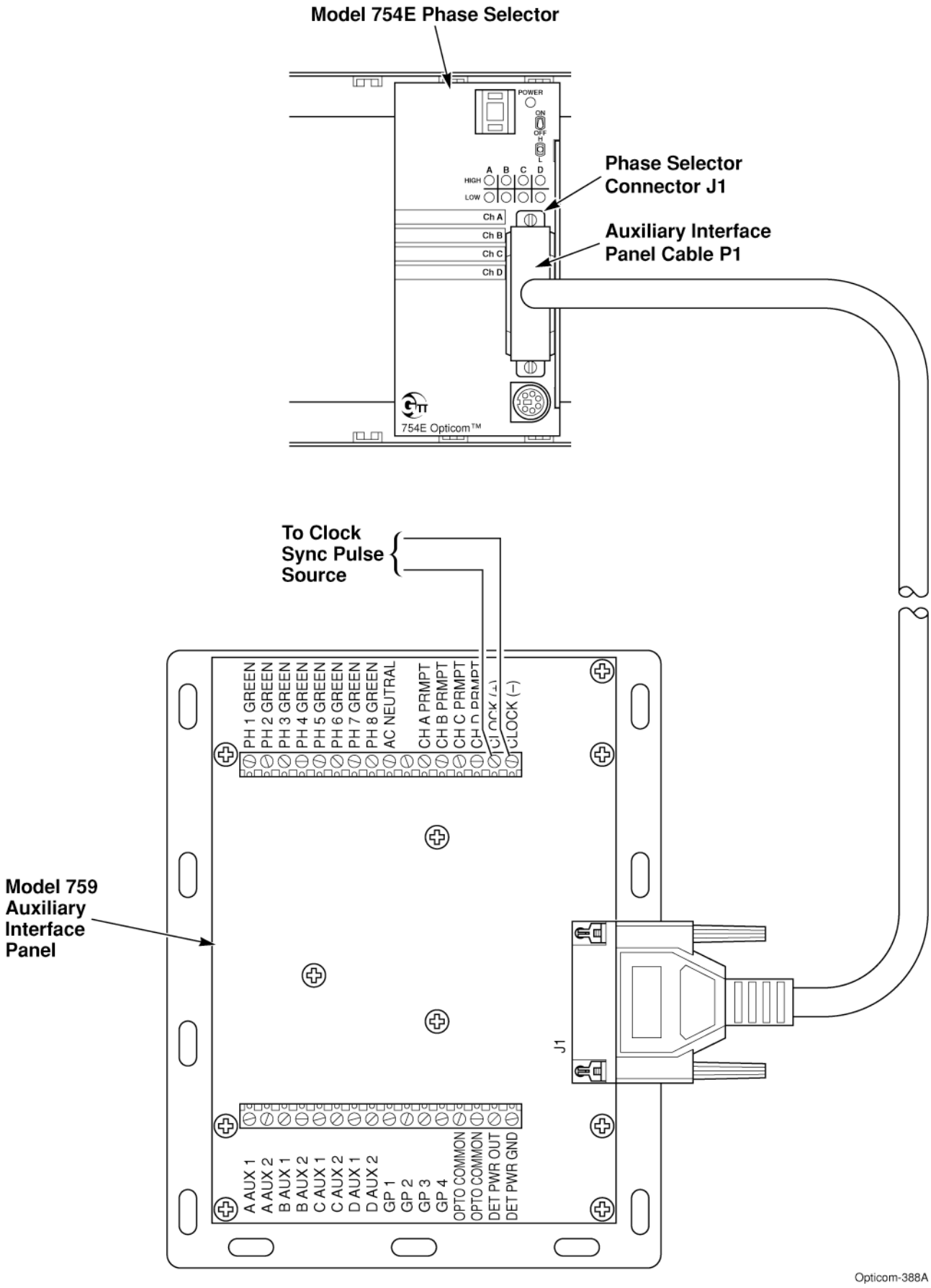

Figure 5-14. Clock Set Connections

5.9 Green Sense Wiring

NOTE

Wire gauges from 22 to 16 AWG may be used with the Opticom™ Infrared System Model 759 Auxiliary Interface Panel. Use wire with a sufficient voltage rating.

See Section 5.6 for information about the auxiliary interface panel installation.

⚠ WARNING

This procedure may expose you to AC voltage and the risk of electric shock or electrocution. **Turn off the AC mains and use accepted and recognized safety precautions to avoid exposure to the risk of electric shock or electrocution.** Electric shock may cause severe injury or death.

1. Locate and identify the load bay field wire connections (AC+) for each phase green in the traffic control cabinet.
2. Determine the appropriate length of wire required to connect the auxiliary interface panel to the wiring points in the load bay of the traffic control cabinet.
3. Strip 7 mm of insulation from both ends of the wires being used.
4. Insert one end of each wire into the desired terminal of the auxiliary interface panel terminal block and tighten the screw. (For example,
   Phase 1 green is labeled PH 1 GREEN on the terminal block.)
5. Repeat steps 2 through 4 for all desired phase greens.
6. Route the wires through the traffic control cabinet to the AC side of the load switches in the load bay. Install spade lugs on the wires.
7. Insert one wire at a time into the correct terminal in the load bay and tighten the screws.
8. Locate and identify the AC neutral (AC–) connection in the traffic control cabinet.
9. Determine the appropriate length of wire required to connect the auxiliary interface panel to the wiring point of the AC neutral connection.
10. Strip 7 mm of insulation from both ends of the wire being used.
11. Insert one end of the wire into the AC NEUTRAL terminal of the auxiliary interface panel terminal block and tighten the screw.
12. Route the wire through the traffic control cabinet to the AC neutral terminal. Install a spade lug and connect the wire to the AC neutral terminal.
13. Verify that your wiring is correct, and the connections are tight.
14. Using the Desired Greens window in the 750 series configuration software (750-CS), set the desired green phases for each channel. If your system also uses Low priority emitters, set the desired green phases for Low Priority for each channel.

5.10 Communication Cable Installation

NOTE

If the installation includes remote communication cabling, one 700 series communication cable is required for the Model 752E or 754E phase selector.

1. Plug the 6-pin end of the 700 series communication cable into the communication port on the front of the Model 752E or 754E phase selector. See Figure 5-15.
2. Plug the other end of the cable into the PC. A 9-pin to 25-pin "nullmodem" adapter may be required for communication to a modem.
3. Skip to Section 8.1, Installation Checkout.

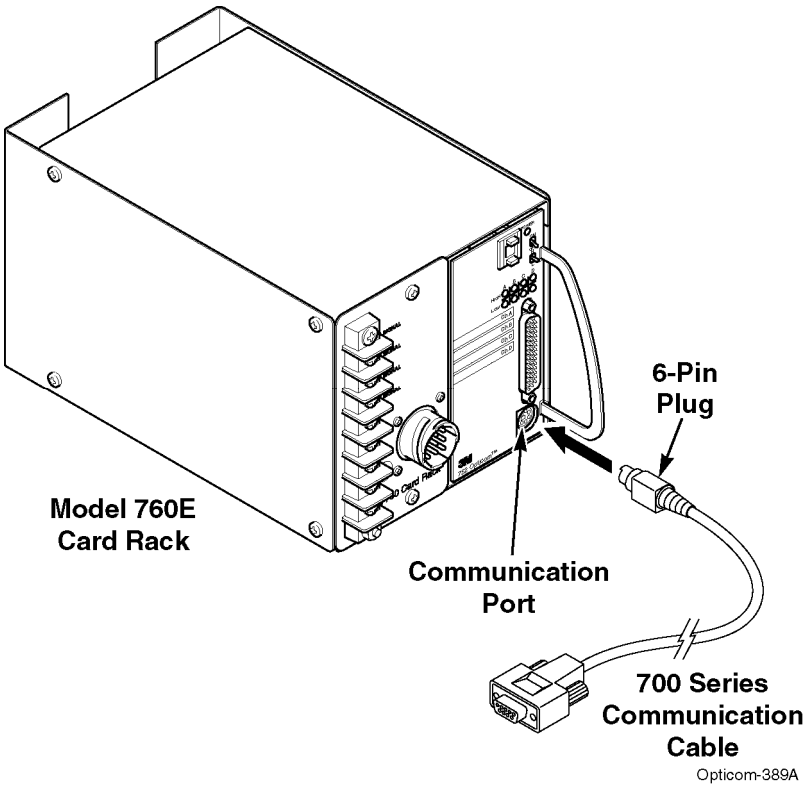

Figure 5-15. 700 Series Communication Cable Installation

5.11 Phase Selector Pin Index

Table 5-2 lists the pin index for the edge connector of the Opticom™ Infrared System Model 752E Phase Selector.

Figure 5-16 shows the pin letters and numbers for the edge connector of the phase selector.

Table 5-2. Model 752E Phase Selector Edge Connector Pin Index

Pin	Function
A	24 VDC ground
B	+24 VDC input
C	Not used
D	Channel A primary detector input
E	Detector 24 VDC power output
F	Channel A output, collector (+)
H	Channel A output, emitter (–)
J	Channel B primary detector input
K	Detector ground
L	Earth ground
M	Not used
N	Not used
P	Not used
R	Detector 24 VDC power output
S	Not used
T	Not used
U	Not used
V	Detector ground
W	Channel B output, collector (+)
X	Channel B output, emitter (–)
Y	Not used
Z	Not used
19	TXD (data out)
21	RXD (data in)

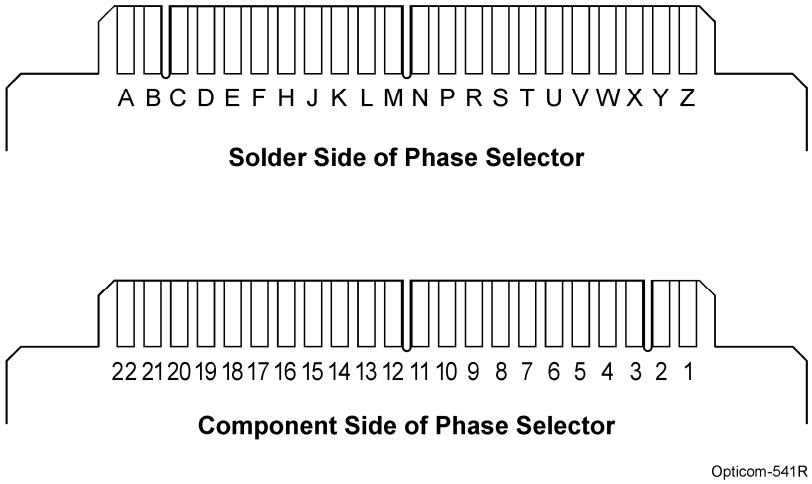

Figure 5-16. Phase Selector Edge Connector Pin Letters and Numbers

Table 5-3 lists the pin index for the edge connector of the Model 754E phase selector.

Table 5-3. Model 754E Phase Selector Edge Connector Pin Index

Pin	Function
A	24 VDC ground
B	+24 VDC input
C	Not used
D	Channel A primary detector input
E	Detector 24 VDC power output
F	Channel A output, collector (+)
H	Channel A output, emitter (–)
J	Channel B primary detector input
K	Detector ground
L	Earth ground
M	Not used
N	Not used
P	Channel C primary detector input
R	Detector 24 VDC power output
S	Channel C output, collector (+)
T	Channel C output, emitter (–)
U	Channel D primary detector input
V	Detector ground
W	Channel B output, collector (+)
X	Channel B output, emitter (–)
Y	Channel D output, collector (+)
Z	Channel D output, emitter (–)
19	TXD (data out)
21	RXD (data in)

Table 5-4 lists the pin index for connector J1 on the front panel of the Opticom™ Infrared System Model 752E Phase Selector.

Table 5-4. Model 752E Phase Selector J1 Pin Index

Pin	Function
1	Phase 1 green input (AC+)
2	Phase 2 green input (AC+)
3	Phase 3 green input (AC+)
4	Logic ground
5	Logic ground
6	Not used
7	Channel B preempt output
8	Not used
9	Not used
10	General purpose 1 output
11	General purpose 2 output
12	Clock set (–) controller ground input
13	Channel A aux. detector 2 input
14	Channel B aux. detector 2 input
15	Channel B aux. detector 1 input
16	Phase 4 green input (AC+)
17	Phase 5 green input (AC+)
18	Phase 6 green input (AC+)
19	24 VDC detector power output
20	24 VDC detector power output
21	Not used
22	Not used
23	Channel A preempt output
24	Not used
25	Not used
26	General purpose 3 output
27	General purpose 4 output
28	Channel A aux. detector 1 input
29	Not used
30	Not used
31	Phase 7 green input (AC+)
32	Phase 8 green input (AC+)
33	Not used
34	Ground
35	Ground
36	Not used
37	Not used
38	Clock set (+) controller input
39	Not used
40	Not used
41	Not used
42	Not used
43	Not used
44	Not used

Table 5-5 lists the pin index for connector J1 on the front panel of the Model 754E phase selector.

Table 5-5. Model 754E Phase Selector J1 Pin Index

Pin	Function
1	Phase 1 green input (AC+)
2	Phase 2 green input (AC+)
3	Phase 3 green input (AC+)
4	Logic ground
5	Logic ground
6	Not used
7	Channel B preempt output
8	Not used
9	Not used
10	General purpose 1 output
11	General purpose 2 output
12	Clock set (–) controller ground input
13	Channel A aux. detector 2 input
14	Channel B aux. detector 2 input
15	Channel B aux. detector 1 input
16	Phase 4 green input (AC+)
17	Phase 5 green input (AC+)
18	Phase 6 green input (AC+)
19	24 VDC detector power output
20	24 VDC detector power output
21	Channel D preempt output
22	Channel C preempt output
23	Channel A preempt output
24	Not used
25	Not used
26	General purpose 3 output
27	General purpose 4 output
28	Channel A aux. detector 1 input
29	Channel C aux. detector 2 input
30	Channel C aux. detector 1 input
31	Phase 7 green input (AC+)
32	Phase 8 green input (AC+)
33	Not used
34	Ground
35	Ground
36	Not used
37	Not used
38	Clock set (+) controller input
39	Not used
40	Not used
41	Not used
42	Not used
43	Channel D aux. detector 2 input
44	Channel D aux. detector 1 input

Table 5-6 lists the pin index for the communication port on the front panel of the Opticom™ Infrared System Model 752E or 754E Phase Selector. The table also lists the pin index for the communication cable.

Table 5-6. Communication Port and Communication Cable Pin Index

Communication Port		Communication Cable		
Pin	**Function**	**6-Pin**	**9-Pin**	**Wire Color**
1	RXD (receive data)	P1-1	S1-3	Blue
2	Ground	P1-2	S1-5	White
3	TXD (transmit data)	P1-3	S1-2	Red
4	* RTS (ready to send)	P1-4	S1-8	Orange
5	* CTS (clear to send)	P1-5	S1-7	Yellow
6	NC		S1-Shell	Shield

* RTS and CTS are intended to be used with twisted-pair, leased-line, 2400-baud devices.

Figure 5-17 shows the pin numbers for both ends of the communication cable.

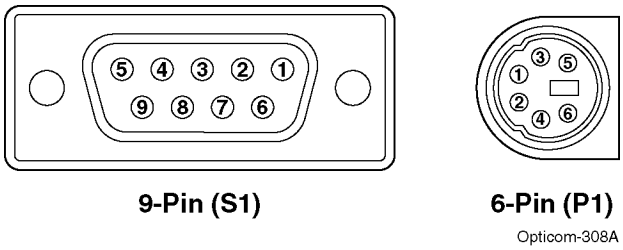

Figure 5-17. Communication Cable Connector Pin View

6 Communication Networks

6.1 TIA/RS-232 Communication Port

The Model 752E and 754E phase selectors have a TIA/RS-232 communication port on the front panel. This port has a default baud rate of 9600 baud, but may be set to transmission rates of 1200, 2400, 4800, or 9600 bps via the 750 series configuration software (750-CS).

The connector for the front panel communication port is an industry-standard, 6-pin DIN connector. The pin assignments for the connector are listed in Table 6-1. The table also lists the pin assignments for the TXD (transmit data) and RXD (receive data) signals available on the rear edge connector of the phase selectors.

Table 6-1. Communication Port Pin Assignments

Front Panel	
COM Port Pin Number	**Signal Name**
1	RXD (receive data)
2	GND (ground)
3	TXD (transmit data)
4	RTS (ready to send)
5	CTS (clear to send)
6	Shield
Rear Edge	
COM Port Pin Number	**Signal Name**
19	TXD (transmit data)
21	RXD (receive data)

6.2 Rear Communication Port Jumper Board

The rear communication port jumper board is intended to connect the front panel communication port in parallel with the card edge communication port on card edge pins 19 and 21. The connection is completed when an additional jumper board is installed in the 5-position header strip labeled U29. When this additional jumper board is not installed, the rear communication port is not enabled.

One jumper board is installed on an unlabeled 7-position header strip when the phase selector is shipped from the factory. See Figure 6-1. To connect the front panel communication port in parallel with the card edge communication port, install an additional jumper board on the U29 header strip located near the bottom edge of the circuit board. See Figure 6-2.

Additional jumper boards (78-8114-5369-1) are available from GTT. You can order them from your GTT representative.

6.3 Enabling Terminator Resistor for Front Communication Port

For installations where more than one terminal device is connected to the phase selector, or where two or more phase selectors share the same RS-232 line, one of the Model 752E or 754E phase selectors must have the terminator resistor enabled.

Model 752E and 754E phase selectors are shipped from the factory with terminator resistor jumper JP1 in place. When multiple phase selectors are connected together, jumper JP1 must be removed from all of the boards except one. Figure 6-1 shows the location of the terminator resistor jumper JP1.

6.4 Communication Module Installation

The optional Model 832 communication module may be added to enhance the communication capabilities of the phase selector. The Model 832 communication module adds separate card edge communication port capabilities to the phase selector, which doubles the number of communication ports from one to two. This addition is convenient for applications where both system communication (through the card edge communication port) and local communication (through the front panel communication port) are desirable concurrently.

To install the Model 832 communication module, remove the jumper board(s) and install the module on the U29 header strip and the 7-position header strip. (Be careful when inserting the module so you don't bend the pins.) Secure the module to the phase selector with the screw provided.

Set up the baud rate using the 750 series configuration software (750-CS).

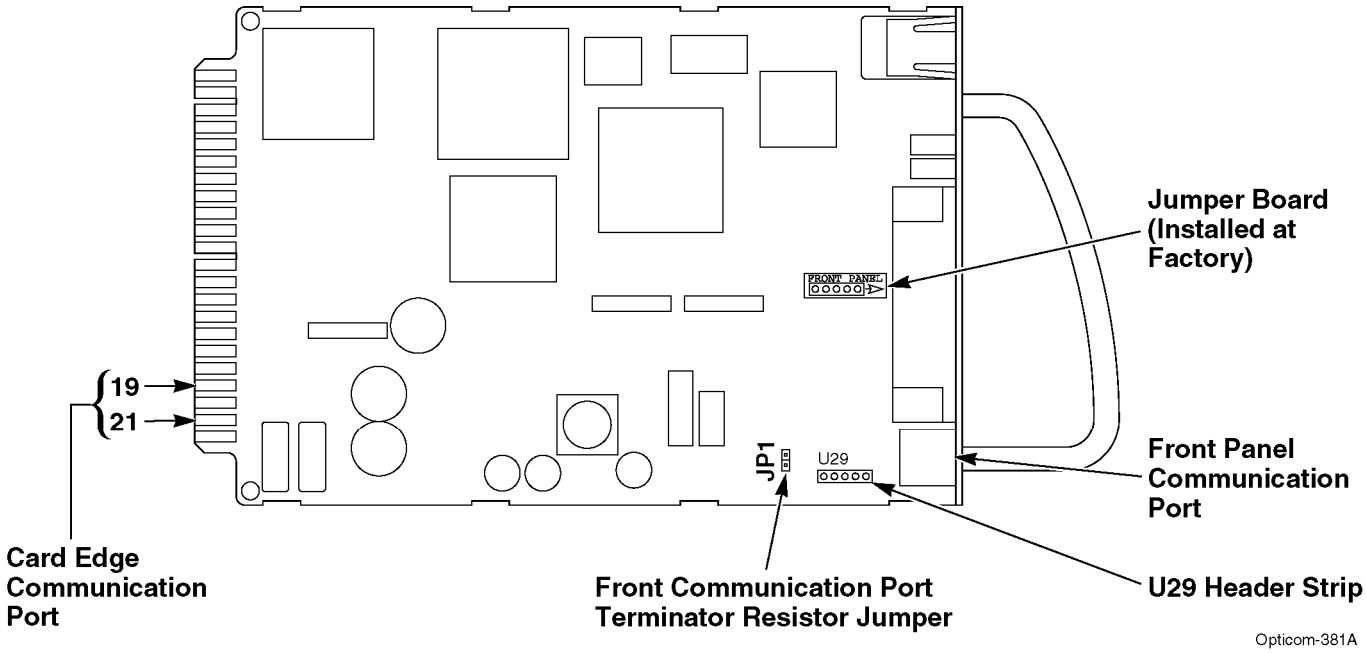

Figure 6-1. Communication Port Jumper Locations

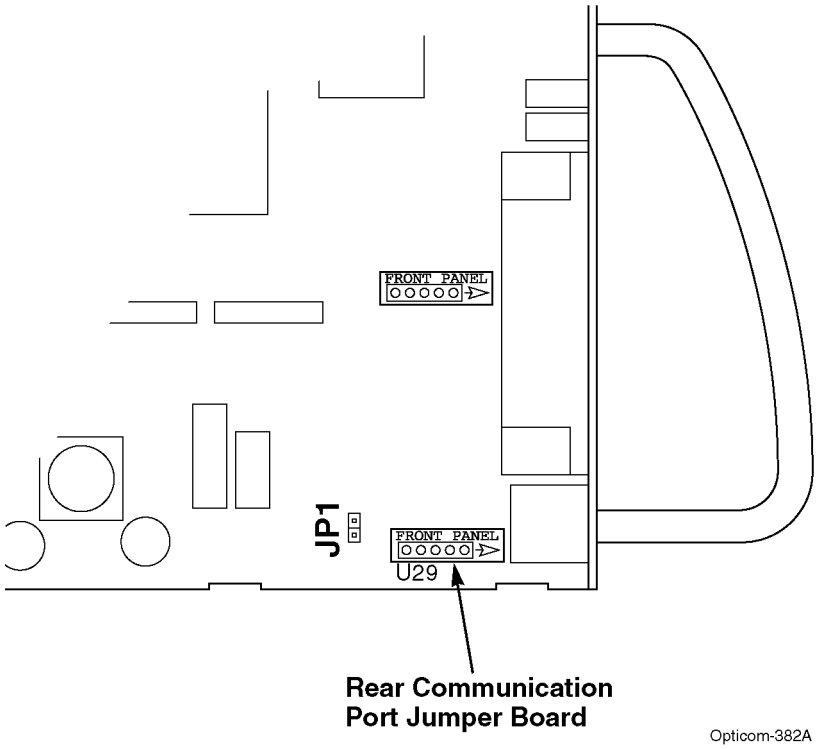

Figure 6-2. Rear Communication Port Jumper Board Installed

6.4.1 Enabling Terminator Resistor for Rear Communication Port

When using the Opticom™ Infrared System Model 832 Communication Module, terminator resistor usage is the same as outlined in Section 6.3 for the front communication port. For the rear communication port, if more than one terminal device is used or if multiple Model 752E or 754E phase selectors share the same RS-232 line, one of the phase selectors must have the terminator resistor enabled.

The Model 832 communication module is shipped from the factory with terminator resistor jumpers JP1 and JP2 in place. In order to connect multiple Model 752E or 754E phase selectors, remove the two jumpers from the module on all but one of the interconnected Model 752E or 754E phase selectors. Figure 6-3 shows the location of the terminator resistor jumpers JP1 and JP2.

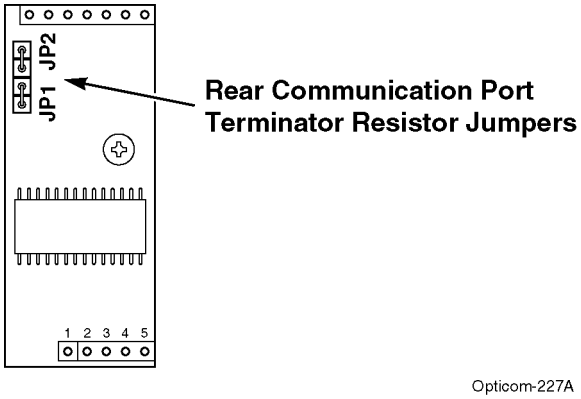

Figure 6-3. Rear Communication Port Terminator Resistor Jumpers

7 Setup

7.1 Two Channel Phase Selector

Figure 7-1 shows the front panel layout of the Opticom™ Infrared System Model 752E Phase Selector.

7.1.1 Indicators

The Model 752E phase selector has the following five indicators. See Figure 7-1.

- Power On
- Channel A High Priority
- Channel A Low Priority
- Channel B High Priority
- Channel B Low Priority

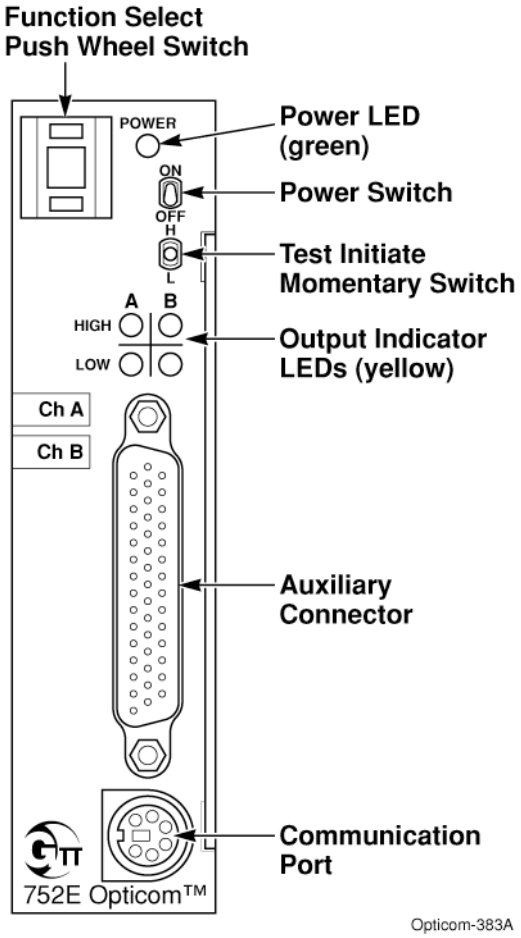

Figure 7-1. Front Panel for Two Channel Phase Selectors

7.2 Four Channel Phase Selector

Figure 7-2 shows the front panel layout of the Model 754E phase selector.

7.2.1 Indicators

The Model 754E phase selector has the following nine indicators. See Figure 7-2.

- Power On
- Channel A High Priority
- Channel A Low Priority
- Channel B High Priority
- Channel B Low Priority
- Channel C High Priority
- Channel C Low Priority
- Channel D High Priority
- Channel D Low Priority

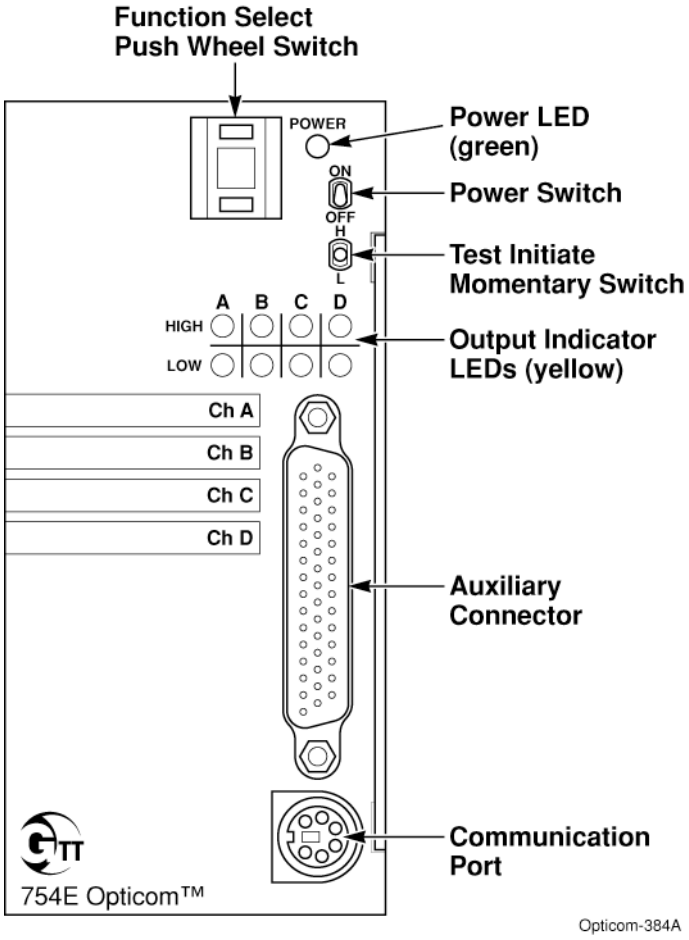

Figure 7-2. Front Panel for Four Channel Phase Selectors

7.3 Switches

The Opticom™ Infrared System Model 752E and 754E Phase Selectors have the following three switches:

- Power On/Off
- High/Low Test Initiate Switch
- Function Select Push-Wheel Switch (10-position, push-wheel for Model 754E phase selectors;
  8-position, push-wheel for Model 752E phase selectors)

The Function Select push-wheel switch is designed to act in conjunction with the High/Low test initiate switch to provide different operations.

Table 7-1 lists the mnemonics you can select using the push-wheel switch and describes the function the phase selector will perform when the High/Low test initiate switch is activated.

Table 7-1. Model 752E/754E Phase Selector Push-Wheel Switch Functions

Switch Position	Function
A, B, C, D	*Priority Control Output Test*—Activates the output for the selected channel and priority. Select the desired channel via the push-wheel switch (A, B, C, or D), then push and hold the test initiate switch to the desired priority (H or L). The selected channel and priority output are active while the test initiate switch is held, and remain active for a minimum of 6 seconds after releasing the switch.
E	*Emitter Loopback Test*—Verifies the communication link between a phase selector and a Model 792 emitter. Set the push-wheel switch to the E position, then push and hold the test initiate switch to the desired priority (H or L). Activate the test by releasing the test initiate switch. A successful emitter loopback test is indicated by the channel A high priority indicator flashing at a 2 Hz rate for 2 seconds.
F	*Detector Function Test*—Verifies proper operation of the Model 711, 721, or 722 detector connected to each channel. Set the push-wheel switch to the F position, then push and hold the test initiate switch to the desired priority (H or L). Activate the test by releasing the test initiate switch. Each channel with a detector(s), that passes the test, is indicated by the associated high priority indicator flashing at a 2 Hz rate for 2 seconds.
P	*Password Override*—Activates password override mode. Set the push-wheel switch to the P position, then push and hold the test initiate switch to the desired priority (H or L). Activate the password override mode by releasing the test initiate switch. The password override mode remains active for 1 hour after releasing the test initiate switch, or until the phase selector is reset.
R	*Reset Parameters to Default*—Resets all configurable parameters for the phase selector to factory default. Set the push-wheel switch to the R position, then hold the test initiate switch in either the H or L position while cycling the power off then on. The test initiate switch must be held for a minimum of 2 seconds following power up to initiate the reset to default action.
S	*Set Channel and Priority Range*—Sets the priority range for each channel. This function requires the presence of a valid priority signal on the desired channel(s). Set the push-wheel switch to the S position, then hold the test initiate switch in either the H or L position while cycling the power off then on. The test initiate switch must be held for a minimum of 6 seconds following power up to initiate the range set function. When you release the test initiate switch, the current signal intensity is the range value stored.
blank	Not used.

8 Checkout

8.1 Installation Checkout

⚠ WARNING

Improper or incomplete programming of the traffic controller may cause improper operation of the traffic signals, which may result in accidents and/or injuries. **To avoid this problem, verify that the operation of the traffic controller is appropriate for your needs before, during, and after actuation of the priority control inputs.** Improper operation of the traffic signals may result in unsafe driver action.

Although in most applications your phase selector will be fully operational right out of the box, GTT recommends that additional set up and verification be performed using ITS Link/750-CS as well as the test switches on the phase selector to verify that all connections are correct, that your detectors have been located correctly, and to make use of all of the features available in the 750E series phase selectors.

Contact your local dealer or your local GTT representative to find out more about the set up and verification services as well as the training services that are available.

The following steps are recommended for all installations. See the Help section of the configuration software (750-CS) for more details on the following steps.

1. Check all wiring connections for accuracy.
2. Ensure that +24 VDC power is present.
3. Set the Model 752E or 754E phase selector power switch to ON.

   The Power LED should be on steady if the unit is not performing diagnostic tests. If it flashes continuously, or if all the LEDs remain on, refer to the troubleshooting instructions in Section 9.

4. Reset the unit to factory default.

   a) To reset all configurable parameters to factory default, set the push-wheel switch to the R position.

   b) Hold the test initiate switch to either the high or low position while power is cycled. The test initiate switch must be held for a minimum of 2 seconds following power up to initiate the reset to default action. Performing this function clears user settings.

5. Start ITS Link and select 750-CS.
6. Open the Call Status window and press the Start button.
7. Look at the noise level for each channel. Each channel that has a detector connected should display a noise level varying between 10-35.
8. Perform a detector response test.

   a) To perform a detector response test, set the push-wheel switch to the F position.

   b) Hold the test initiate switch to either the high or low position momentarily.

   c) The Model 752E and 754E phase selectors will perform a loopback test on all channels. This test requires approximately 8 seconds to perform. During the test the Power LED will flash. At the conclusion of the test all channels with a correctly wired detector will flash for a few seconds.

   d) If the expected channels for your installation do not flash, verify your detector wiring.

   NOTE

   The response test does not place a call to the controller and it does not test the photodiodes in the detector.

9. Verify that green sense has been connected correctly by watching the green status section and comparing this with the readout on either the controller or MMU.

10. Place a test call to the controller.

    a) To place a test call to the controller, set the push-wheel switch to the desired channel. Toggle the test switch to either the high or low position. The phase selector will place a 6-second call of the selected priority to the controller.

    b) If the controller does not recognize the call, verify the wiring between the system and the controller. If the wiring is correct, verify the controller is programmed correctly for priority control.

11. Repeat steps 10a and 10b for all channels. Also repeat for low priority if used.

8.2 Phase Selector Configuration

Using the configuration software (750-CS), configure the phase selector as follows:

1. Enter the intersection name.
2. Set the real-time clock.
3. Perform the following steps if you want to activate the Security feature.

    a) Double click the Valid Codes High Priority icon and select the Class 0 tab.

    b) Click the De-select valid codes radio button.

    c) Click on the blue rectangle in the upper left corner and it will turn white. This will make Class 0, ID 0 an invalid code.

    d) Press the Apply button and then the OK button.

    e) This action will prevent uncoded high priority emitters with a 14 Hz frequency from requesting a green light. You can enhance the security further by making only the emitter codes in the coding plan valid in the phase selector and all other codes invalid.

    f) If you want to also disallow uncoded low priority emitters repeat steps 4a through 4d except select the Valid Codes Low Priority icon.

NOTE

Once the Security feature is enabled, it will prevent the following emitter types from activating the Opticom system:

- Any new or existing Opticom system emitters that are not coded (including neighboring mutual aid responders, unless coded).
- Older generation Opticom™ Infrared system emitters that do not have security coding capability.
- Competitive brand emitters.
- “Home-made” emitters.

4. Change other default values as needed.
5. Drive each approach with a known good emitter-equipped vehicle.

    a) Monitor the test with the Call Status window.

    b) Move or reposition detectors as needed in order to adequately detect approaching vehicles.

6. Proceed to Section 8.3 for setting the range activation point.

8.3 Range Setting (Signal Intensity Threshold Level Adjustment)

This section includes the instructions for setting the range. Two procedures are described to account for the different capabilities of the various emitters. Any Opticom™ Infrared System Model 792 Emitter may be used for the range setting process.

The procedures use a range and timing chart in conjunction with instructions. The range and timing chart shows the relationship between the speed of the priority vehicle and the worst case timing of the traffic controller. The chart also gives the resultant distance, or range, required to allow adequate time for activation of the system before the priority vehicle reaches the intersection.

Section 8.3.1 describes the steps used to adjust the signal levels when the automated range setting feature of the Model 792R emitter is used.

Section 8.3.2 describes the steps used to adjust the signal levels when either an emitter is used that does not have the automated range setting feature; or an emitter is used that has the feature, but the feature is not enabled.

8.3.1 Adjusting Range with Automated Range Setting Feature

The automated range setting feature allows this range setting task to be performed by one person.

NOTE

When the automated range setting feature is used, the signal levels must be adjusted within the first 12 minutes after power is applied to the Model 752E or 754E phase selector. The 12-minute time is the default value set at the factory. This time may be set from 0 to 120 minutes by using the 750 series configuration software (750-CS) for the phase selector.

1. Locate a vehicle equipped with a range setting emitter at the desired distance from the Model 711, 721, or 722 detector at the intersection.
2. Verify that the emitter is operating properly in the low or high priority.
3. Wait for the traffic signal to turn yellow, then turn on the emitter.
4. Press and hold the range setting switch for 15 seconds.
5. Release the range setting switch.
6. Verify that the intersection range is set properly by turning on the emitter during a yellow indication. The signal light should cycle to green in a timely manner.
7. If the light does not cycle to green, begin appropriate systematic troubleshooting procedures to correct the malfunction. Refer to Section 9 for troubleshooting procedures.

8.3.2 Adjusting Range without Automated Range Setting Feature

This range setting task requires two people: one person in the priority vehicle equipped with a Model 792 emitter, and another person at the traffic control cabinet.

1. Locate the emitter-equipped vehicle at the desired distance from the Model 711, 721, or 722 detector at the intersection.
2. Turn off the Model 752E or 754E phase selector.
3. Turn on the emitter (select either high or low priority).
4. At the phase selector, set the push-wheel switch to the S position.
5. Hold the test initiate switch up to set high priority range, or down to set low priority range while cycling the power off then on.
6. While holding the test switch, turn on the phase selector and continue to hold the test switch for 30 seconds, then release it.
7. Turn off the emitter.
8. Verify that the intersection range is set properly by turning on the emitter during a yellow indication. The signal light should cycle to green in a timely manner.
9. If the light does not cycle to green, begin appropriate systematic troubleshooting procedures to correct the malfunction. Refer to Section 9 for troubleshooting procedures.

Range (Feet) and Timing Chart for Model 700 Series Detectors

Timing (seconds	Vehicle Speed (mph)													
	5	10	15	20	25	30	35	40	45	50	55	60	65	70
4	50	110	170	240	310	390	470	560	650	760	860	970	1090	1210
6	70	140	210	290	380	470	570	680	790	900	1020	1150	1280	1420
8	80	170	260	350	460	560	680	790	920	1050	1180	1330	1470	1620
10	90	190	300	410	530	650	780	910	1050	1200	1350	1500	1660	1830
12	110	220	340	470	600	740	880	1030	1180	1340	1510	1680	1850	2030
14	120	250	390	530	680	830	980	1150	1310	1490	1670	1850	2040	2240
16	140	280	430	590	750	910	1090	1260	1450	1640	1830	2030	2230	2450
18	150	310	480	650	820	1000	1190	1380	1580	1780	1990	2210	2430	2650
20	170	340	520	710	900	1090	1290	1500	1710	1930	2150	2380	2620	2860
22	180	370	560	760	970	1180	1390	1620	1840	2080	2310	2560	2810	3060
24	200	400	610	820	1040	1270	1500	1730	1970	2220	2470	2730	3000	3270
26	210	430	650	880	1120	1350	1600	1850	2110	2370	2640	2910	3190	3470
28	230	460	700	940	1190	1440	1700	1970	2240	2520	2800	3090	3380	3680
30	240	490	740	1000	1260	1530	1810	2090	2370	2660	2960	3260	3570	3880
32	260	520	780	1060	1340	1620	1910	2200	2500	2810	3120	3440	3760	4090
34	270	550	830	1120	1410	1710	2010	2320	2630	2960	3280	3610	3950	4290
36	290	580	870	1170	1480	1790	2110	2440	2770	3100	3440	3790	4140	4500
38	300	610	920	1230	1560	1880	2220	2550	2900	3250	3600	3970	4330	4700
40	310	630	960	1290	1630	1970	2320	2670	3030	3400	3770	4140	4520	4910
42	330	660	1000	1350	1700	2060	2420	2790	3160	3540	3930	4320	4710	5110
44	340	690	1050	1410	1780	2150	2520	2910	3290	3690	4090	4490	4900	5320
46	360	720	1090	1470	1850	2230	2630	3020	3430	3840	4250	4670	5090	5530
48	370	750	1140	1530	1920	2320	2730	3140	3560	3980	4410	4850	5290	5730
50	390	780	1180	1590	2000	2410	2830	3260	3690	4130	4570	5020	5480	5940

2500 feet of range may be obtained with Opticom™ Infrared System Model 700 Series Detectors with the adjustment set to maximum.

The shaded area of the chart represents distances where an auxiliary detector can be used.

Values underlined in the chart represent distances beyond the maximum range possible using auxiliary detectors.

3500 feet is the maximum total range possible using one or two Model 700 series auxiliary detectors 1000 feet ahead of the intersection with their range set at the maximum permitted 2500 feet.

Range (Meters) and Timing Chart for Model 700 Series Detectors

Timing (seconds	Vehicle Speed (kph)													
	8	16	24	32	40	48	56	64	74	80	88	97	105	113
4	15	35	50	75	95	120	145	170	200	230	260	295	330	370
6	20	45	65	90	115	145	175	205	240	275	310	350	390	435
8	25	50	80	105	140	170	205	240	280	320	360	405	450	495
10	25	60	90	125	160	200	240	275	320	365	410	455	505	560
12	35	65	105	145	185	225	270	315	360	410	460	510	565	620
14	35	75	120	160	205	255	300	350	400	455	510	565	620	685
16	45	85	130	180	230	275	330	385	440	500	560	620	680	745
18	45	95	145	200	250	305	365	420	480	545	605	675	740	810
20	50	105	160	215	275	330	395	455	520	590	655	725	800	870
22	55	115	170	230	295	360	425	495	560	635	705	780	855	935
24	60	120	185	250	315	385	455	525	600	675	755	830	915	995
26	65	130	200	270	340	410	490	565	645	720	805	885	970	1060
28	70	140	215	285	365	440	520	600	685	770	855	940	1030	1120
30	75	150	225	305	385	465	550	635	720	810	900	995	1090	1185
32	80	160	240	325	410	495	580	670	760	855	950	1050	1145	1245
34	80	170	255	340	430	520	615	705	800	900	1000	1100	1205	1310
36	90	175	265	355	450	545	645	745	845	945	1050	1155	1260	1370
38	90	185	280	375	475	575	675	775	885	990	1095	1210	1320	1435
40	95	190	295	395	495	600	705	815	925	1035	1150	1260	1380	1495
42	100	200	305	410	520	630	740	850	965	1080	1200	1315	1435	1560
44	105	210	320	430	545	655	770	885	1005	1125	1245	1370	1495	1620
46	110	220	330	450	565	680	800	920	1045	1170	1295	1425	1550	1685
48	115	230	345	465	585	705	830	955	1085	1215	1345	1480	1610	1745
50	120	240	360	485	610	735	865	995	1125	1260	1395	1530	1670	1810

760 meters of range may be obtained with Model 700 series detectors with the adjustment set to maximum.

The shaded area of the chart represents distances where an auxiliary detector can be used.

Values underlined in the chart represent distances beyond the maximum range possible using auxiliary detectors.

1065 meters is the maximum total range possible using one or two Model 700 series auxiliary detectors 305 meters ahead of the intersection with their range set at the maximum permitted 760 meters.

8.4 Performance Tests

⚠ WARNING

A completed installation that is not tested may result in improper system operation, which may result in accidents and/or injuries. **To avoid this problem, test the system to verify proper operation.** Improper system operation may result in unsafe driver action.

These installation instructions are the result of tests performed in our laboratory and we believe these tests to be accurate and complete. However, each installation involves variables that cannot be controlled or predicted. These variables may affect the operational characteristics of the system.

To ensure proper system operation, GTT strongly recommends that, when the system is turned on, the installer functionally tests the system using an Opticom™ Infrared System equipped vehicle.

To test the system, the installer drives the priority vehicle through the intersection to verify that the system is performing in accordance with customer requirements.

9 Troubleshooting

9.1 Power-Up/Reset Self Tests

The following tests are performed at power up/reset. The self test failures for the present power up cycle (as a minimum) are stored in non-volatile memory except where noted. A Reset to Default command will not clear self test results.

Failure to pass any of these tests will result in the Opticom™ Infrared System Model 752E or 754E Phase Selector going into Unit Disabled mode indicated by all channel LEDs glowing solid.

9.2 Diagnostic Mode

A diagnostic operational mode is available to provide system diagnostics and data for performance evaluation and system debugging. All diagnostic tests can be initiated either by software commands or by the front panel switches on the phase selector.

During any diagnostic test the Power LED will flash.

9.2.1 Priority Control Output Test

The priority control output test allows the user to manually activate the output for a given channel and priority.

To initiate the test, select the desired channel via the push-wheel switch (A, B, C, or D), then push and hold the test initiate switch to the desired priority (H or L). The selected channel and priority output are active while the test initiate switch is held, and remain active for a minimum of 6 seconds after releasing the switch.

9.2.2 Detector Response Test

The phase selector can perform a test to verify proper operation and presence of a Model 711, 721, or 722 detector connected to each channel.

To initiate the test, set the push-wheel switch to the F position, then push and hold the test initiate switch to the desired priority (H or L). The test is activated by releasing the test initiate switch.

Each channel with a detector(s), that passes the test, is indicated by the associated high priority indicator flashing at a 2 Hz rate for 2 seconds.

The detector circuit is tested, all except the photocell. This test does not generate a priority control output.

9.3 Fuse Location

Figure 9-1 shows the location of the fuse on the phase selector board.

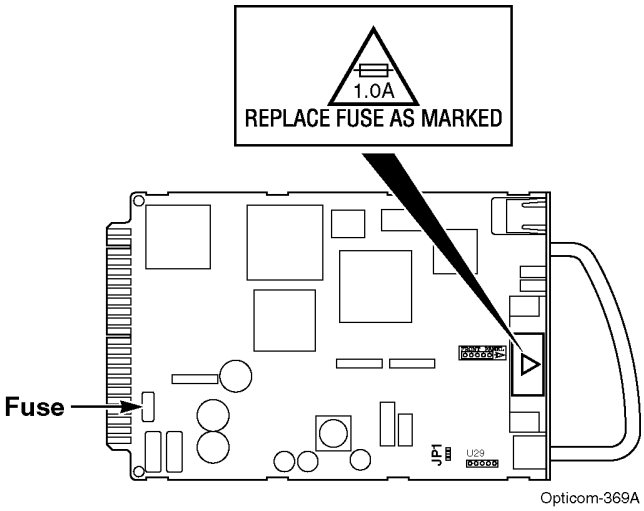

Figure 9-1. Fuse Location

9.4 Troubleshooting Symptoms, Possible Causes, and Suggested Solutions

Table 9-1 shows the symptoms of Model 752E or 754E phase selector installation problems. The table also shows the possible causes of those problems and suggests solutions to correct them.

Table 9-1. Troubleshooting Symptoms, Possible Causes, and Solutions

Symptom	Possible Cause	Solution
All channel LEDs and Power LED are on solid.	Phase selector failed.	Remove the phase selector and return it to GTT for service.
Power LED will not light.	Wiring incorrect.	If 24 VDC is not present, check wiring and the control cabinet circuit breakers.
	Fuse blown.	Replace with Littlefuse P/N 0154001 (1.0 Amp). See Figure 9-1 for fuse location. If fuses continue to fail, return the phase selector to GTT for repair.
Power LED is lit, but call LEDs do not light when a high priority signal is present.	Phase selector failed.	Place a test call on channel A high priority by setting the push-wheel switch to A and holding the test switch in the up position. The high priority call LED for channel A should light. Wait until the channel A call LED goes out. Set the push-wheel switch to channel B. Hold the test switch in the up position. The high priority LED indicator for channel B should light. For Model 754E phase selectors, continue with the following: Set the push-wheel switch to channel C. Hold the test switch in the up position. The high priority LED indicator for channel C should light. Set the push-wheel switch to channel D. Hold the test switch in the up position. The high priority LED indicator for channel D should light. If any of the call indicator LEDs fail to light, return the unit to GTT for repair.
	Emitter is out of range, or Emitter ID is not valid in the phase selector.	To test this possibility, reset the phase selector to default range settings by setting the push-wheel switch to R and holding the test switch in the high, or up, position for at least 5 seconds while cycling the power off then on. The test switch must be held for a minimum of 2 seconds following power up. This will clear any high priority range settings and ID code restrictions.

Table 9-1. Troubleshooting Symptoms, Possible Causes, and Solutions (Cont.)

Symptom	Possible Cause	Solution
Power LED is lit, but call LEDs do not light when a high priority signal is present. (Cont.)	No DC voltage to detector, or bad wiring.	At the Model 760E card racks, measure the voltage across TB1-5 and TB1-7 with the orange detector wires disconnected. Replace the phase selector if the voltage is less than 20 VDC. Reconnect the orange detector wires. Verify that all detector connections are wired per this installation manual. For a final quick wiring check, remove the Model 754E or 752E phase selector(s) from their slots in the card racks and measure the resistance between all combinations of detector wires. A resistance reading of less than 500 ohms between any two wires indicates a short in either the detector wiring or the detector(s).
	Detector failed.	If all wiring is correct, replace the detector on the failed channel with a known good unit. If there is still a problem, please contact Intelligent Transportation Systems Technical Service at 1-651-575-5072.
Power LED is lit, but call LEDs do not light when a low priority signal is present.	Phase selector failed.	Place a test call on channel A low priority by setting the push-wheel switch to A and holding the test switch in the down position. The low priority call LED for channel A should light. Wait until the channel A call LED goes out. Set the push-wheel switch to channel B. Hold the test switch in the down position. The low priority LED indicator for channel B should light. For Model 754E phase selectors, continue with the following: Set the push-wheel switch to channel C. Hold the test switch in the down position. The low priority LED indicator for channel C should light. Set the push-wheel switch to channel D. Hold the test switch in the down position. The low priority LED indicator for channel D should light. If any of the call indicator LEDs fail to light, return the unit to GTT for repair.
	Emitter is out of range, or Emitter ID is not valid in the phase selector.	To test this possibility, use the 750 series configuration software (750-CS) to set the low priority range setting values to zero and to eliminate any ID code restrictions on the emitter signal.

Table 9-1. Troubleshooting Symptoms, Possible Causes, and Solutions (Cont.)

Symptom	Possible Cause	Solution
Power LED is lit, but call LEDs do not light when a low priority signal is present. (Cont.)	No DC voltage to detector, or bad wiring.	At the Model 760E card racks, measure the voltage across TB1-5 and TB1-7 with the orange detector wires disconnected. Replace the phase selector if the voltage is less than 20 VDC. Reconnect the orange detector wires. Verify that all detector connections are wired per this installation manual. For a final quick wiring check, remove the Model 754E or 752E phase selector(s) from their slots in the card racks and measure the resistance between all combinations of detector wires. A resistance reading of less than 500 ohms between any two wires indicates a short in either the detector wiring or the detector(s).
	Detector failed.	If all wiring is correct, replace the detector on the failed channel with a known good unit. If there is still a problem, please contact Intelligent Transportation Systems Technical Service at 1-651-575-5072.
Phase selector call indicator LEDs light, but intersection will not acknowledge signal.	Incorrect wiring.	Verify that call outputs are wired to correct pins. Refer to Table 5-2 and Table 5-3 for pin assignments.
	Incorrectly programmed controller.	If the outputs are correct, verify that the controller is programmed correctly and that signal lines are wired correctly to the controller's priority control inputs.
Green terminates before priority vehicle clears the intersection.	Improper phase selector programming.	Reprogram the phase selector hold time.
	Improper detector alignment.	Align the detector to overcome temporary signal blockages, or level the detector to allow a view of the entire vehicle approach path.
	Phase selector failed.	Replace the phase selector. Return the failed unit to GTT for service.

Table 9-1. Troubleshooting Symptoms, Possible Causes, and Solutions (Cont.)

Symptom	Possible Cause	Solution
Intersection is slow to respond.	Dirty detector lenses.	Clean detector lenses.
	Emitter misaligned.	Align emitter.
	Range set point is not correct.	Reset the range by adjusting the signal intensity threshold level. See Section 8.3.
	Incorrectly programmed controller.	If the outputs are correct, verify that the controller is programmed to respond to a priority control input in a safe and timely manner.
Call will not drop.	Detector oscillating.	Disconnect the detector from the channel experiencing the problem. The call LED should turn off. If it does, replace the detector.
	Phase selector failed.	Disconnect the detector from the channel experiencing the problem. The call LED should turn off. If the call remains, replace the phase selector.

10 Maintenance

The Opticom™ Infrared System components are designed for reliable operation. Inspect the components at regular intervals to ensure proper system operation.

GTT recommends the following:

- All Model 711, 721, or 722 detectors should be cleaned and inspected at least every twelve months.
- Each intersection and vehicle system should be inspected and tested at least every twelve months to ensure that it functions to your specifications and requirements.
- Intersection systems should be tested with known good emitter systems.
- Emitter systems should be tested with known good intersection systems.
- You should develop a test plan that fits your department's operations and meets the needs of your system.
- You should keep accurate and up-to-date records of system performance and test results.

Test the Model 752E or 754E phase selector as outlined below:

1. Set the push-wheel switch to channel A. Hold the test initiate switch up. The controller should recognize a channel A high priority request (the channel A High LED will light). Release the test switch.
2. If the controller does not recognize the high priority request, substitute a spare unit into the system and re-test. If the problem persists with the spare unit, the problem may be in the wiring from the phase selector/card rack or the traffic control system.
3. Hold the test initiate switch down. The controller should recognize a channel A low priority request (the channel A Low LED will light). Release the test switch.
4. If the controller does not recognize the low priority request, substitute a spare unit into the system and re-test. If the problem persists with the spare unit, the problem may be in the wiring from the phase selector/card rack or the traffic control system.
5. Repeat steps 1 through 4 for channel(s) B (C and D on Model 754E phase selectors) setting the push-wheel switch to B (C and D, respectively).

NOTE

More extensive system tests are available by using the 750 series configuration software (750-CS).

Important Notice to Purchaser:

EXCEPT FOR THE LIMITED WARRANTIES SET FORTH IN THIS DOCUMENT, GLOBAL TRAFFIC TECHNOLOGIES (GTT) MAKES NO OTHER WARRANTIES AND EXPRESSLY DISCLAIMS ALL OTHER WARRANTIES, WHETHER EXPRESS OR IMPLIED, INCLUDING, WITHOUT LIMITATION, ANY WARRANTY AS TO MERCHANTABILITY OR FITNESS FOR A PARTICULAR USE.

GTT will, at its sole option, repair, replace or refund any amounts paid for any Opticom™ Infrared System component found to be defective in materials or manufacture within five (5) years from the date of shipment from GTT. See "Warranty and Extended Coverage" for details and limitations of the coverage plan. GTT will provide a functioning replacement component at a standard charge per unit for an additional five (5) years.

GTT warrants future system operability coverage as described herein. The warranties set forth in this document shall not apply to (A) incandescent lamps (confirmation lights) or (B) to any Opticom infrared system components which have been (1) repaired or modified by persons not authorized by GTT; (2) subjected to incorrect installation, misuse, neglect or accident; (3) damaged by extreme atmospheric or weather-related conditions; or (4) subjected to events or use outside the normal or anticipated course.

IN NO EVENT SHALL GTT BE LIABLE FOR ANY INJURY (INCLUDING, WITHOUT LIMITATION, PERSONAL INJURY), DEATH, LOSS, OR DAMAGE (INCLUDING, WITHOUT LIMITATION, PROPERTY DAMAGE), WHETHER DIRECT, INDIRECT, INCIDENTAL, SPECIAL, CONSEQUENTIAL, OR OTHERWISE, ARISING OUT OF THE USE OR INABILITY TO USE, REPAIR OR FAILURE TO REPAIR, ANY GTT PRODUCT. REGARDLESS OF THE LEGAL THEORY ASSERTED. THE REMEDIES SET FORTH IN THIS DOCUMENT ARE EXCLUSIVE.

Sale and use of the Opticom infrared system is expressly restricted to authorized agencies of government customers, within their specific jurisdictions. However, because the infrared signal generated by the Opticom infrared system is not exclusive, GTT does not warrant exclusive activation by purchaser.

Global Traffic Technologies

Global Traffic Technologies, LLC
7800 Third Street North
St. Paul, Minnesota 55128-5441
1-800-258-4610
651-789-7333
www.gtt.com

Global Traffic Technologies Canada, Inc.
157 Adelaide Street West
Suite 448
Toronto, ON M5H 4E7
Canada
1-800-258-4610

75-0500-3191-5 Rev. D