Global Traffic Technologies

Installation Instructions June 2010

Opticom™ Infrared System

Model 794H LED Emitter
Model 794T LED Emitter
Model 794L LED Emitter

Table of Contents

1 About This Manual 1
1.1 Purpose of Manual 1
1.2 Manual Conventions 1
1.3 Manual Organization 1

2 Safety Information 2
2.1 Intended Use 2
2.2 Technical Support 2
2.3 Safety Messages and Safety Labels 2
2.3.1 Safety Message Format 2
2.3.2 Safety Label Format 3
2.4 Safety Messages Contained in this Manual 4
2.5 Safety Label Locations 5
2.6 Safety Considerations 6
2.6.1 Personal Safety Equipment and Clothing 6
2.6.2 Electric Shock 6
2.6.3 Explosion 6
2.6.4 Chemical Burns 6
2.7 Disposal of Device 6

3 Description 7
3.1 Opticom™ System 7
3.2 Model 794H, 794T and 794L Emitters 8

4 Features 10

5 Installation 11
5.1 Emitter Installation 12
5.2 Emitter Control Switch Installation 15
5.3 Individual Switch Installation 19
5.4 Final Wiring Connections 21
5.4.1 Power Connection Recommendations 22
5.4.2 Power Connection Testing 22
5.5 Emitter Cable Connector Pin Index 23
5.6 Emitter Programming 23

6 Checkout 25
6.1 Installation Checkout 25
6.2 Performance Tests 25

7 Range Setting (Signal Intensity Threshold Level Adjustment) 26

8 Maintenance 27

9 Troubleshooting 28

1 About This Manual

1.1 Purpose of Manual

This manual provides step-by-step instructions for installing The Global Traffic Technologies Opticom™ Infrared System Model 794H, 794T and 794L LED Emitters*. It is intended for use by installers, maintenance personnel, and others who are responsible for the installation and maintenance of the system.

1.2 Manual Conventions

The conventions listed in Table 1-1 help to make this manual easier to use by presenting a uniform approach to the descriptions, phrases, and nomenclature.

1.3 Manual Organization

This manual is divided into eight sections.

Section 1. About This Manual
Contains information about the organization and content of this manual.

Section 2. Safety Information
Contains important information about the safety messages, safety labels, safety precautions, and procedures for installation of this device.

Section 3. Description
Briefly describes the Model 794H, 794T and 794L emitters and their related Opticom infrared system components.

Section 4. Features
Describes important features and characteristics of the Model 794H, 794T and 794L emitters.

Section 5. Installation
Contains step-by-step installation instructions.

Section 6. Checkout
Contains information on how to check out and test the installed system.

Section 7. Signal Intensity Threshold Level Adjustment (Range Setting)
Contains information about adjusting the range.

Section 8. Maintenance
Contains information and recommendations to ensure reliable system operation.

Table 1-1. Manual Conventions

Element	Convention	Example
Model names	First or formal reference: initial caps Subsequent use or informal reference: Initial caps for *Model*, lowercase for remainder	Opticom™ Infrared System Model 794H LED Emitter Model 794H emitter, or the emitter
Feature names	Initial caps	the Disable feature
Switch position	Uppercase	the OFF position

*The method of using the components of the Opticom™ Infrared system may be covered by US Patent Number 5172113. Other U.S. and foreign patents pending.

2 Safety Information

We provide important safety information and warnings to assist you in understanding and avoiding potential harm to yourself, and possible damage to equipment, during the installation of Opticom™ Infrared System equipment. Although we have included many potential hazards you may encounter during the installation of this equipment, we cannot predict all of the possible hazards and this list should not be a substitute for your judgment and experience.

Please read and observe all safety information and instructions in this manual before installing the system equipment. Also, save this installation manual and keep it near the equipment.

If you are unsure about any part of this installation or of the potential hazards discussed, please contact your supervisor immediately.

2.1 Intended Use

The system is intended to assist authorized priority vehicles through signalized intersections by providing temporary right-of-way through vehicle operator interface to the system and through the use of common traffic controller functions.

2.2 Technical Support

If you have questions about the system, its use, or operation, please contact your dealer or call the GTT Technical Service department at 1-800-258-4610.

2.3 Safety Messages and Safety Labels

We include safety messages and safety labels in this manual to help you protect your safety and the safety of others. This section contains important information to help you recognize and understand these safety messages.

Please read all messages before proceeding with the installation.

2.3.1 Safety Message Format

Safety messages are designed to alert you to potential hazards that can cause personal injury to you or others. They can also indicate the possibility of property damage.

Each safety message box contains a safety alert symbol (⚠); one of three signal words: DANGER, WARNING, or CAUTION; and a safety message.

The signal words and symbols, and their meanings, are shown below:

⚠ DANGER
The safety message is in this box.

DANGER means you and/or someone else WILL be KILLED or SERIOUSLY HURT if you do not follow these instructions.

⚠ WARNING
The safety message is in this box.

WARNING means you and/or someone else MAY be KILLED or SERIOUSLY HURT if you do not follow these instructions.

⚠ CAUTION
The safety message is in this box.

CAUTION means you and/or someone else MAY be HURT or property damage may result if you do not follow these instructions.

In addition to the symbols and words explained above, each safety message identifies the hazard, describes what you can and should do to avoid the risk of exposure to the hazard, and tells the probable consequences of not avoiding the hazard.

2.4 Safety Messages Contained in this Manual

The following safety messages appear in this manual:

⚠ WARNING

Vehicle batteries contain sulfuric acid and may contain explosive gases. **Keep sparks, flames, and cigarettes away. Wear eye protection. Disconnect the negative cable first to prevent shorting the positive terminal to the chassis when removing the positive cable.** Battery acid may cause skin irritation and eye injury. Explosive gases may cause severe injury or death.

⚠ CAUTION

Mount the emitter right side up. **Failure to properly install the emitter may damage the unit and void the warranty**. The GTT Logo on the lens of the emitter must be right side up and the two small weep holes must be facing down. If the weep holes are facing up, the emitter may fill with water and cause it to fail.

⚠ CAUTION

Connecting power to a power distribution system may not offer the current capacity or protection of direct connection to the battery, which may result in damage to the equipment or vehicle. **To avoid this problem, make the power connection directly to the battery or as close to the battery as possible.** An improper power connection may result in damage to the equipment or vehicle.

⚠ WARNING

The system should ALWAYS be TESTED to verify the proper operation of the system. There are many variables in normal traffic operation and although it is not likely that the system can place an intersection into a dangerous configuration, the traffic signals should always be obeyed.

⚠ WARNING

For proper system operation, the range and timing chart that corresponds to the model of detector that is being adjusted should always be used. The use of an incorrect range and timing chart may cause improper system operation and may adversely affect normal traffic operations; therefore, the traffic signals should always be obeyed.

⚠ WARNING

A VISIBLE-LIGHT filtered strobe based emitter or an LED based emitter should be USED to set the ranges to avoid improper system operation. An improper system operation may occur if a clear lens strobe based emitter is used to set ranges. The effect of using a clear lens strobe based emitter to set ranges is a factor among many variables that may affect normal traffic operation and may adversely affect system performance.

2.5 Safety Label Locations

There is one safety labels on the Opticom™ Infrared System Model 794H, 794T & 794L LED Emitters. If a safety label is missing or cannot be read, please contact your dealer or the GTT repair department for a replacement. See Figures 2-1 for the safety label location.

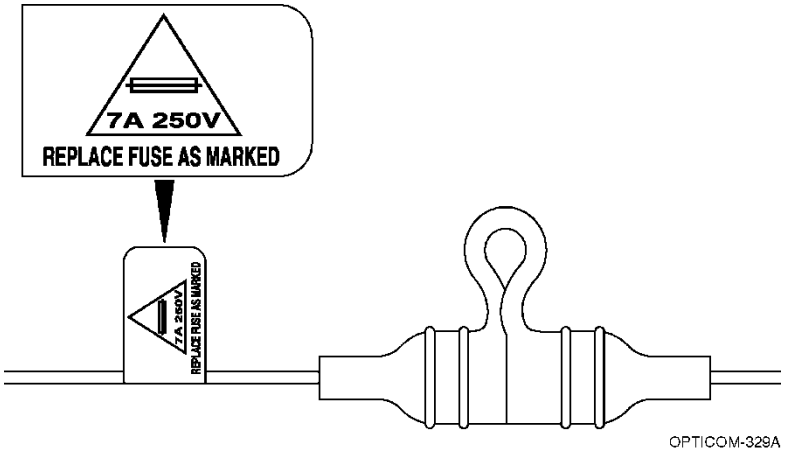

Figure 2-1. Emitter Fuse Safety Label Location

2.6 Safety Considerations

Please consider the following safety issues before beginning the installation.

Although we have compiled this list of common safety considerations, it should not be considered as complete. It is not intended to take the place of your good judgment, training, and experience.

2.6.1 Personal Safety Equipment and Clothing

Personal safety equipment and clothing including high visibility vests, hard hats, gloves, electrical shock or electrocution protection clothing and equipment, safety shoes, safety glasses, face shields, goggles, and hearing protection devices are just some of the items available to you.

Choose the right equipment for the job. If you are unsure of which safety equipment is recommended or appropriate for the job, ask your supervisor or foreman.

2.6.2 Electric Shock

As a trained installer of electrical equipment you are aware of the dangers associated with installation of electrical devices. Always be sure that the power to the equipment, and all associated equipment, is turned off and the vehicle battery is disconnected. We also recommend that you wait for the period of time specified in the warning message before beginning any procedure. This waiting period is required to allow electrically charged components to discharge and minimize your exposure to the risk of electric shock and electrocution. Use the equipment, techniques, and procedures that you learned during your training or apprenticeship or other electrical industry recognized safety procedures.

If you are unsure of which techniques, procedures, and protective equipment are recommended or appropriate for the job, ask your supervisor or foreman.

2.6.3 Explosion

Common automotive-type batteries produce an explosive gas under some conditions. This gas may easily be ignited by a spark or flame as you work on the vehicle. To reduce the risk of explosion, disconnect the battery, work in a well ventilated area, avoid the use of devices that create sparks or use open flames, and use the appropriate personal safety equipment and clothing.

If you are unsure of which techniques, procedures, and protective equipment are recommended or appropriate for the job, ask your supervisor or foreman.

2.6.4 Chemical Burns

Common automotive-type batteries contain strong acid that can cause personal injury if you come in contact with the acid. To reduce exposure to the risk of chemical burns wear appropriate protective clothing and handle the battery with care.

If you are unsure of which techniques, procedures, and protective equipment are recommended or appropriate for the job, ask your supervisor or foreman.

2.7 Disposal of Device

Please dispose of the device in accordance with all local, state, and federal laws and regulations.

3 Description

This section provides a general description of the Opticom™ Infrared System and a detailed description of Model 794H, 794T and 794L LED Emitters.

3.1 Opticom system

The system assists authorized priority vehicles through signalized intersections by providing temporary right-of-way through the use of common traffic controller functions. The Probe mode records and communicates information (for example, vehicle location, travel direction, user class and identification) which can be used to provide traffic flow information by calculating the rate of movement of designated probe vehicles.

The Opticom system consists of the following matched components:

- **Emitter** — Model 794, 792, 795 Emitter.
- **Remote Coding Unit**— RC790 Remote Coding Unit.
- **Detector** — Model 711, 721, and 722 Detectors and Model 138 Detector Cable. Also auxiliary interface panels, if auxiliary detectors are used.
- **Phase Selector** — Model 752 and 754 Phase Selectors.
- **Card Rack/Input File** — Model 760 Card Rack, Model 770 Gate Opener Cad Rack or California/New York Type 170 Controller Input File.

The emitter, with an appropriate emitter control switch, is mounted on the priority vehicle. It generates a series of pulses in the infrared wavelength. These pulses are sensed by the detector mounted at the intersection.

The detector converts the infrared energy into electrical signals that are transmitted by the detector cable to the phase selector in the traffic controller cabinet.

For Priority Control mode, the phase selector discriminates between valid emitter signals and other sources of energy received by the detectors, and activates its outputs in response to valid priority emitter signals. The phase selector outputs are connected to the traffic controller's inputs, to request the traffic controller to deliver the desired green for the priority vehicle.

For Probe mode, the phase selector logs the user class, identification, and time, but does not send any signals to the traffic controller.

Interface cards are required in applications where the controller cannot recognize external priority control signals. Interface cards are electrically connected between the phase selector and the traffic controller.

The card rack/input file provides the power and logic wiring for the phase selector, which plugs directly into a slot in the unit.

3.2 Model 794H, 794T and 794L Emitters

Opticom™ Infrared System Model 794 LED Emitters are compact, weather-resistant, infrared energy-emitting devices with optional encoded-signal operation. These emitters are intended for use on priority vehicles. The emitter system consists of an LED module with a built-in power supply, an emitter cable, and the appropriate emitter control switch.

Notes:

- **Only the four red LEDs will be seen as flashing. The Infrared LEDs will be flashing but they are not visible. They may be viewed through a digital camera or a cell phone camera.**

- **Clear lens strobe based emitters produce slightly different signal strengths. If your system includes vehicles with clear lens strobe based emitters and vehicles with strobe based visible-light filtered emitters, you may perceive a slight reduction in range when operating the system with a visible-light filtered emitter or when used with older generation Opticom detectors. Operators of vehicles equipped with visible-light filtered strobe emitters and LED emitters may report inadequate range or slow signal light response time when used on these older detectors.**

- **If your system includes vehicles with clear lens strobe based emitters, vehicles with visible-light filtered strobe based emitters and LED based emitters with the same priority level, we recommend that you set the ranges for every intersection in your system using a visible-light filtered emitter or LED based emitter. Setting (or resetting) ranges with a visible-light filtered strobe based emitter or LED based emitter will ensure proper system performance for both visible-light filtered strobe based emitters, clear lens strobe based emitters and LED based emitters.**

The Model 794H is programmed to provide High-Priority operation. The Model 794L and 794T emitters are programmed to provide Low-Priority operation.

Appropriate vehicle Class and ID numbers are determined at the time of installation and are programmed by the user via ITS Link/790-CS configuration software or the RC790 remote coding unit..

Two emitter switch configurations are available as accessories for Model 794H, 794T and 794L emitters. All switch configurations include emitter diagnostic indicators.

- The Model 793S emitter control switch is a custom-designed, fully-enclosed switch assembly consisting of an alternate-action, push-button switch with a positive latch down in the ON position, and an indicator light. A mounting bracket is included. This emitter control switch is intended to be used as an emitter on/off switch for any Priority. The switch is mounted in the vehicle operator's compartment.

- The Model 793B emitter control switch is a double-pole, single-throw rocker switch with an indicator light. A simple mounting bracket is included. This emitter control switch is intended to be used as an emitter on/off switch in custom switch panels in the vehicle operator's compartment.

The optional Disable feature uses an additional switch (customer supplied) that connects to battery negative when actuated.

This manual describes how to install Model 794H and 794L emitters and emitter control switches.

Figure 3-1 shows a typical emitter installation for an authorized service or maintenance vehicle.

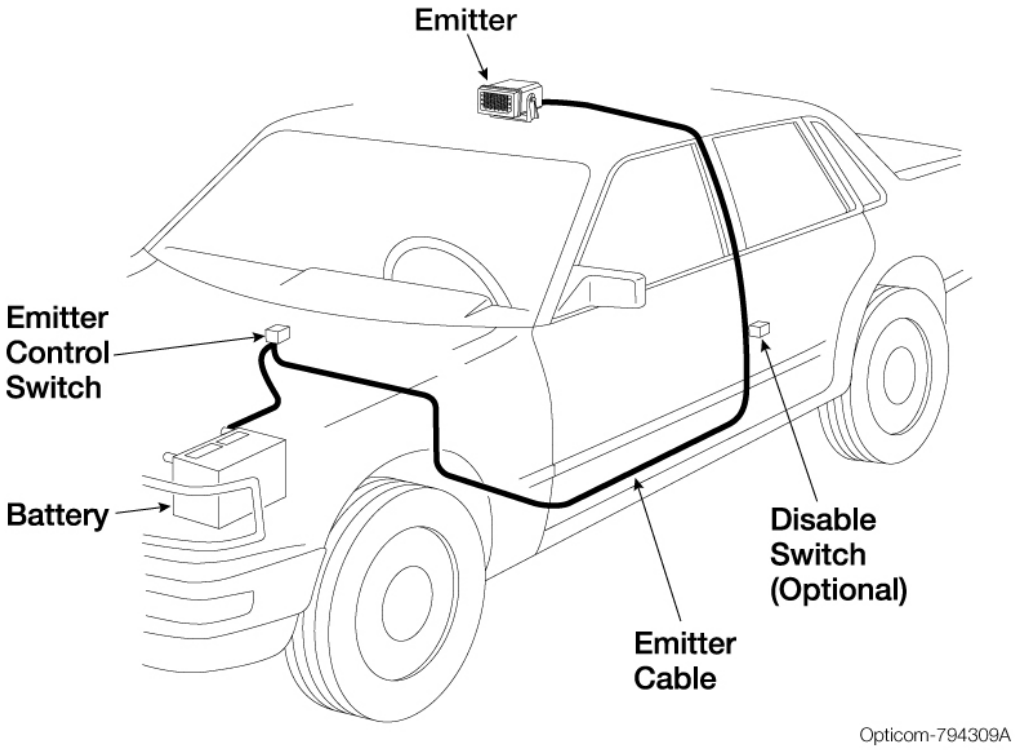

Figure 3-1. Typical Emitter Installation for a Vehicle

4 Features

Opticom™ Infrared System Model 794H, 794T, 794L Emitters have the following features:

- LED infrared light source
- Operates on 10-32 VDC
- Very low current consumption, less than 300mA
- Integrated power supply and LED array for small size
- Capable of remote programming via RC790 Remote Coding Unit
- Impact resistant design
- Fixed flash rate:
  High Priority = 14 Hz
  Low Priority = 10 Hz
- Vehicle identification encoding; selectable at installation
- User-selectable disable mode; Latching or Non-Latching modes
- Disable circuitry (indicator flashes at 0.5 Hz)
- Self-diagnostic capability (failure indicator flashes at 2 Hz)
- User configurable visible LEDS
- 10,000 vehicle identification codes for each priority/frequency
- Wide operational temperature range:
  –30°F to +140°F
- CE certified
- SAE J575 June 2007 compliant
- SAE J1455 June 2006 compliant
- 25-foot emitter cable for installation flexibility
- J1708 compliant communication port
- Available Windows™[1] Configuration and Maintenance Software

[1] Windows is a trademark of Microsoft Corporation.

5 Installation

This section describes the installation of Model 794H, 794T and 794L LED Emitters and Model 793S, and 793B emitter control switches. It also describes how to set the Vehicle ID code using 790-CS configuration software.

Notes:

Please read and fully understand the following precautionary paragraphs before starting the installation.

- **Before cutting or drilling any openings in the vehicle or lightbar, draw a diagram showing placement, measurements, and dimensions. Use the diagram to avoid drilling or cutting holes in undesirable locations.**
- **Always follow the vehicle manufacturer's recommendations concerning modification, alteration, and installation or connection of accessories or equipment to the vehicle and lightbar.**
- **Installation on specialty vehicles (such as motorcycles, parking enforcement, utility and special maintenance vehicles) requires particular care and attention to details.**
- **Do not mount the emitter within 18 inches of a radio antenna.**
- **Follow the installation instructions to avoid possible radio frequency interference problems.**
- **The emitter should point straight ahead, and should be mounted level (parallel with the road) and as high on the vehicle as possible.**
- **The emitter should not be obstructed by other lights, speakers, grill work, antennas, or other devices.**
- **The emitter should not be mounted inside the passenger compartment.**
- **Do not operate an emitter with a damaged lens or place colored lenses in front of the emitter. Use only a GTT replacement lens.**
- **Wires that are routed under carpets or mats should be run between the pad and the carpet. This will minimize abrasion and heat damage from catalytic converters.**
- **Protect cables with armor or sheathing when they are routed around sharp corners and edges. Avoid routing cables through potential pinch points. Clamp or tie all cables in place. Route and secure cables well away from moving parts.**

5.1 Emitter Installation

This subsection describes how to install Opticom™ Infrared System Model 794H, 794T and 794L LED Emitters.

⚠ WARNING

Vehicle batteries contain sulfuric acid and may contain explosive gases. **Keep sparks, flames, and cigarettes away. Wear eye protection. Disconnect the negative cable first to prevent shorting the positive terminal to the chassis when removing the positive cable.** Battery acid may cause skin irritation and eye injury. Explosive gases may cause severe injury or death.

1. Disconnect the battery before beginning the installation. Disconnect the negative battery cable first, then the positive battery cable.
2. Remove interior panels and headliners, as necessary, to provide access for cable routing.
3. Using the emitter bracket as a template, mark where you want to drill holes at the mounting location. Be sure the emitter bracket is parallel with the front of the vehicle.
4. Drill two 1/4-inch holes at the mounting location.

Note:

- **The installer may have to fabricate special brackets to mount the emitter in some lightbars.**

5. Position the emitter bracket and gasket over the mounting holes and use two hex head bolts, flat washers, fender washers, lock washers, and nuts to secure the bracket to the vehicle. See Figure 5-1.
6. Check for proper forward alignment, and then tighten the nuts.

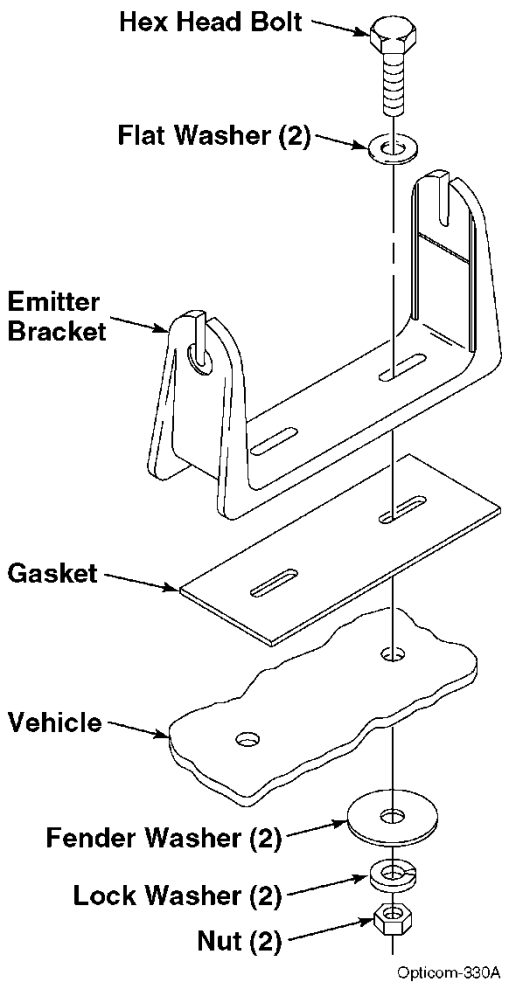

Figure 5-1. Emitter Bracket Installation

7. Slide a carriage bolt into the slot on each side of the Model 794H, 794T and 794L emitter. Next, slide the two plastic friction plates onto the bolts with the ridged surfaces together. See Figure 5-2.

8. Insert the emitter into the mounting bracket. Make sure the friction plates are square and inside of the bracket arms. Then, place the flat washers, lock washers, and acorn nuts on the bolts. See Figure 5-2.

Note:

- **All of the parts described in steps 7 and 8, and shown in Figure 5-2, are important and must be used to ensure that the emitter will remain mounted and aimed correctly.**

⚠ CAUTION

Mount the emitter right side up. **Failure to properly install the emitter may damage the unit and void the warranty**. The GTT Logo on the lens of the emitter must be right side up and the two small weep holes must be facing down. If the weep holes are facing up, the emitter may fill with water and cause it to fail.

9. Align the emitter so it is facing forward and parallel with the ground, and with the GTT Logo upright. Then tighten the acorn nuts.

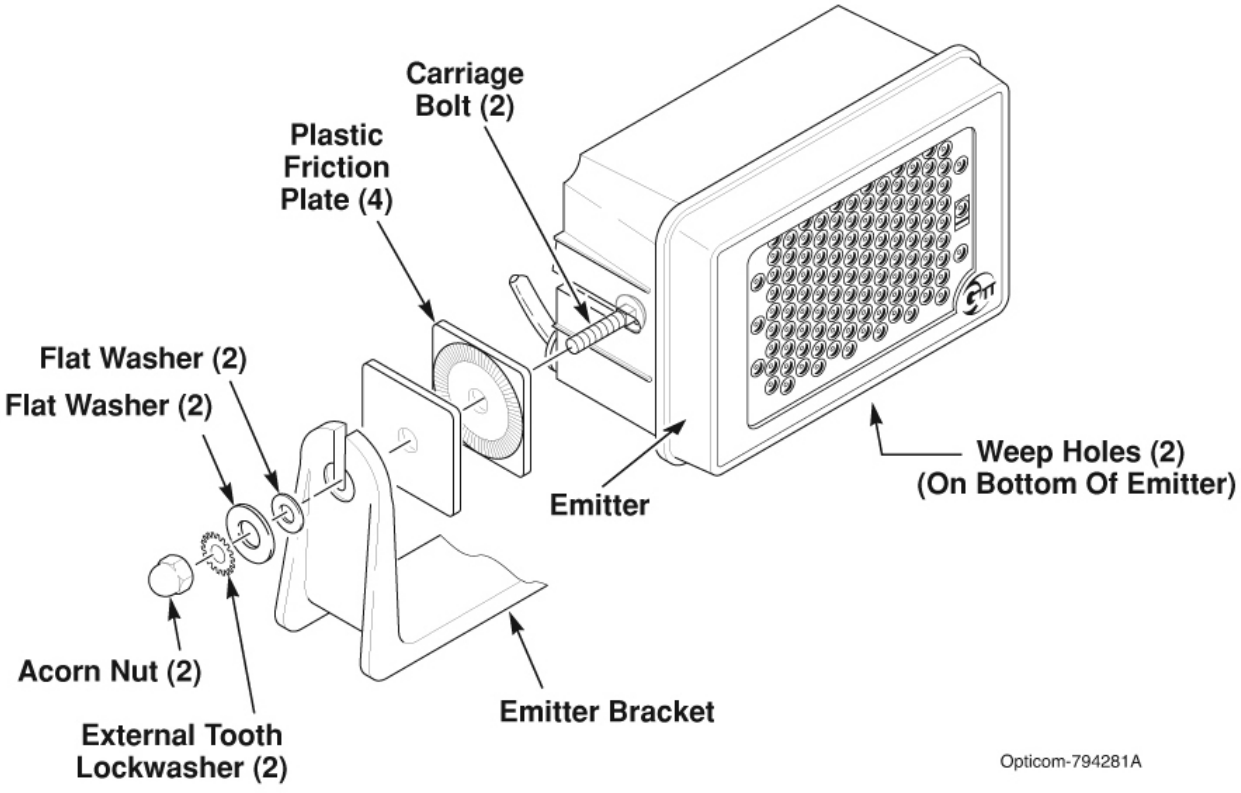

Figure 5-2. Emitter, Bracket, and Mounting Hardware

10. Mark the location of the entry hole for the Opticom™ Infrared System Model 794H, 794T or 794L LED Emitter cable. Check the hole location both inside and outside of the vehicle.
11. Drill a 1/2-inch hole for the emitter cable entrance grommet.
12. Tape wrap the end of the emitter cable to protect the wires and to ease cable routing. See Figure 5-3.
13. Select an appropriate size grommet from those supplied. The grommets are supplied in three sizes to allow for different thicknesses of vehicle sheet metal.
14. Place the grommet on the cable and slide it toward the emitter. Leave enough cable exposed to reach the emitter.
15. Route the taped end of the cable from the emitter mounting location to the emitter control switch location. Apply lubricant to the grommet, then insert it into the hole in the vehicle body or lightbar. (Window cleaner works well as a lubricant.)
16. Connect the emitter cable to the emitter (fully engage the locking ring) and pull the excess cable into the vehicle. Be careful not to unseat the grommet.
17. Dry the grommet and apply a sealant to the cable, grommet, and vehicle to seal the assembly against moisture penetration. (Silicone RTV is a good choice for a sealant.)
18. Finish routing and securing the emitter cable in the vehicle. Use cable ties to secure all wires away from heat sources and moving parts.
19. Remove the tape from the end of the emitter cable.

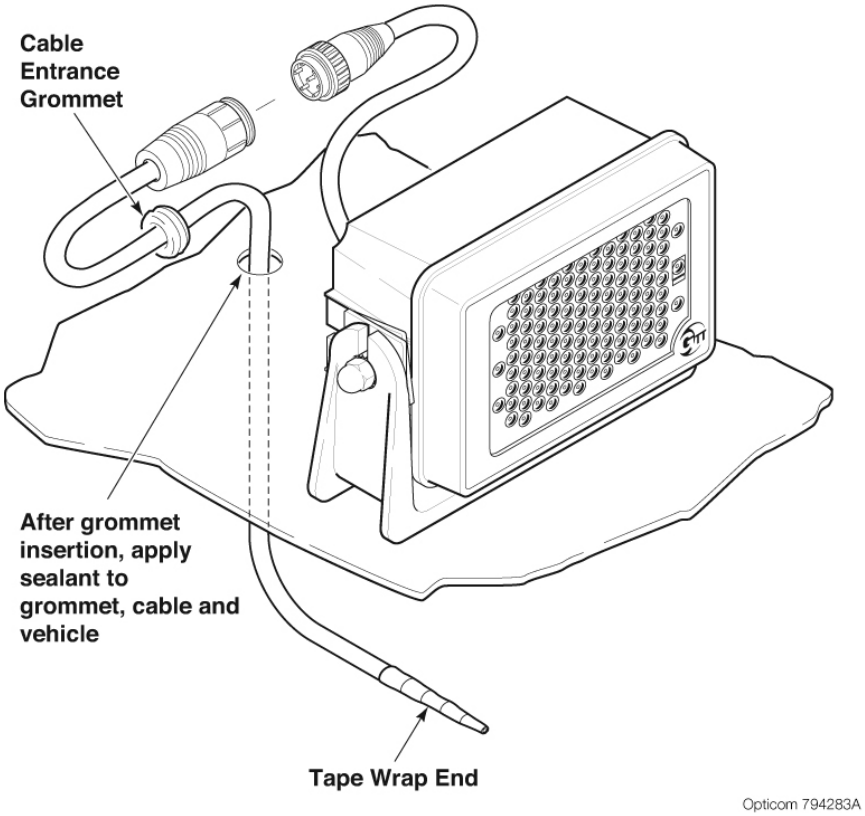

Figure 5-3. Emitter Cable Installation

5.2 Emitter Control Switch Installation

This subsection describes the installation of the Model 793S emitter control switch. It also describes how to connect the emitter cable from Model 794H, 794T and 794L emitters to the emitter control switch.

Notes:

Please read and fully understand the following precautionary paragraphs before installing the emitter control switch.

- **Emitter installations may include a customer-supplied disable switch in addition to the emitter control switch. The Disable feature turns off the emitter when the disable switch closes to battery negative. This feature typically uses an existing switch that indicates the presence of conditions deemed appropriate to disable the emitter. Such conditions include putting the transmission in park, setting the parking brake, or opening the vehicle operator's door. The use of a disable switch is highly recommended so that emergency vehicle drivers do not need to remember to shut off their emitter when arriving at the scene. Without using this feature, nearby intersections may be unnecessarily held in preemption by vehicles at the scene.**
- **The emitter control switch location must be readily accessible to the vehicle operator.**
- **The emitter control switch must not be in the path of airbag deployment.**
- **The emitter cable is routed between the emitter, the emitter control switch, the disable switch, and the battery.**
- **Use care when drilling holes to avoid drilling into undesirable locations**.

1. Determine the desired location to mount the emitter control switch. Mark and drill two 7/32-inch holes, using the emitter control switch mounting bracket as a template.
2. Insert the two 10-32 x 3/4-inch cap screws through the holes in the mounting bracket and mounting surface. See Figure 5-4.
3. Use the two lock washers and 10-32 nuts to secure the bracket to the vehicle.

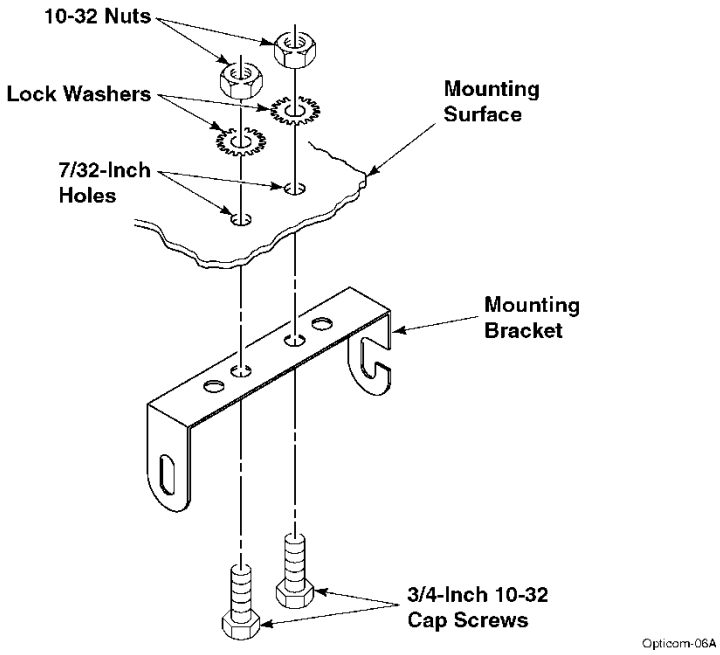

Figure 5-4. Emitter Control Switch Mounting Bracket Installation

4. Cut the Opticom™ Infrared System Model 794H, 794T and 794L LED Emitter cable to the proper length. Remove about 6 inches of the outer jacket from the end of the cable. Be careful not to cut the wires inside.

   Strip 1/4-inch of insulation from the black, red, green, and orange wires. Cut off the blue and gray wires.

5. Insert the black wire into one end of an insulated butt splice connector and crimp. Connect the other end of the connector to a customer-supplied black wire (16 AWG, long enough to connect to the battery negative terminal). See Figure 5-5.

6. Install a spade lug on the red wire and connect it to the terminal labeled RED on the back of the emitter control switch.

7. Install a spade lug on the green wire and connect it to the terminal labeled GREEN on the back of the emitter control switch.

Note:

- **The orange wire enables the range-setting option. Only Model 793R emitter control switches, with the range-setting switch, will be able to use this option. The 793S has a terminal for the orange wire but it has no internal connection.**

- **<u>If you are not using a 793S switch, leave the orange wire disconnected.</u>**

8. Install a spade lug on the orange wire and connect it to the terminal labeled ORANGE on the back of the emitter control switch.

9. Strip 1/4-inch of insulation from a customer-supplied red wire (16 AWG) and install a spade lug on it. Connect the red wire to the terminal labeled BATTERY on the back of the emitter control switch.

10. Connect the free end of the red wire to the fuse holder. Connect the other end of the fuse holder to a customer-supplied red wire (16 AWG, long enough to connect to the battery positive terminal). Do not install the fuse yet.

11. Install the fuse rating label on the red wire near the fuse holder.

12. **Leave the Gray and Blue wires disconnected. Cut off and tape off the Gray and Blue wires.**

13. Place the Model 793S emitter control switch into the mounting bracket. Use the two 1/4-inch acorn nuts and lock washers to secure the switch box to the bracket. See Figure 5-6.

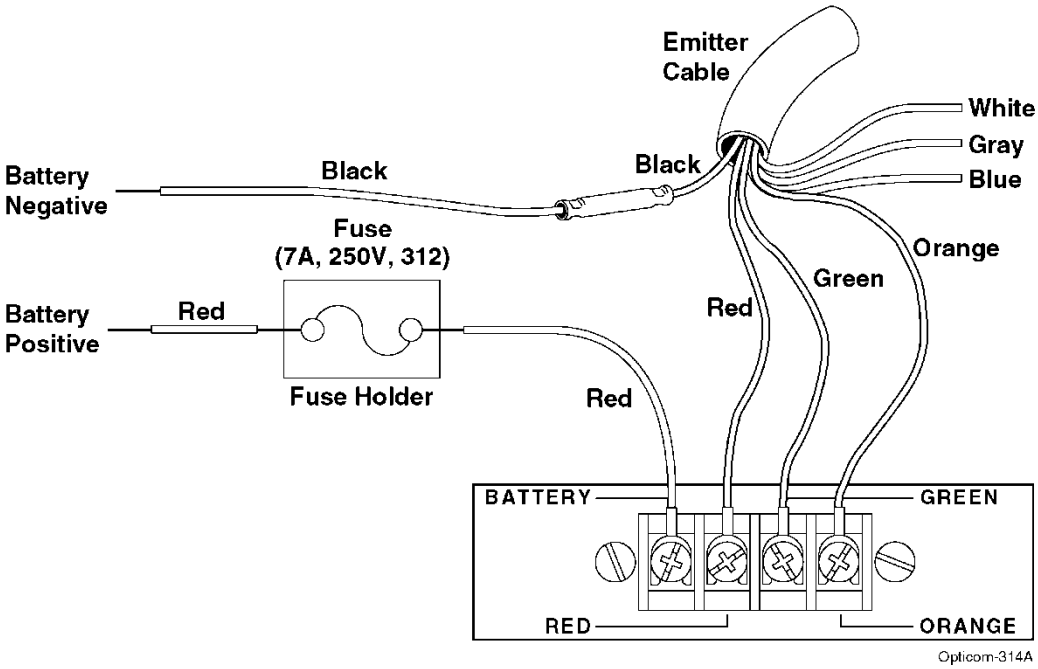

Figure 5-5. Model 793S Emitter Control Switch Wiring

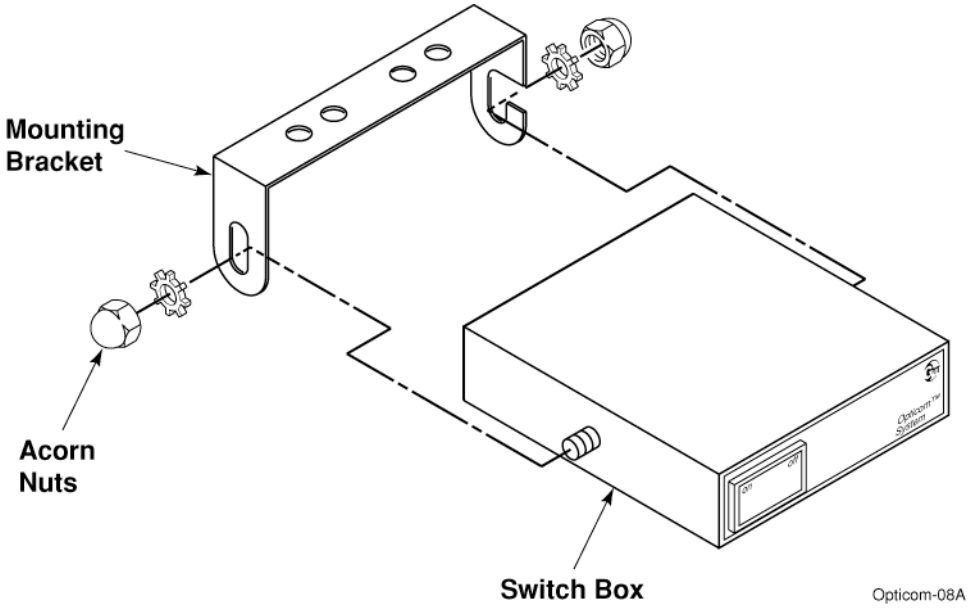

Figure 5-6. Emitter Control Switch Installation

14. To install the Disable feature with an Opticom™ Infrared System Model 793S Emitter Control Switch, continue with step 14.

    If the Disable feature is not being installed, cut off the white wire and go to Subsection 5.4, Final Wiring Connections. **The use of a disable switch is highly recommended so that emergency vehicle drivers do not need to remember to shut off their emitter when arriving at the scene. Without using this feature, nearby intersections may be unnecessarily held in preemption by vehicles at the scene.**

15. Strip 1/4-inch of insulation from the white wire and insert it into one end of an insulated butt splice connector and crimp.

16. Strip 1/4-inch of insulation from a customer-supplied white wire (16 AWG) and insert it into the unused end of the connector and crimp.

17. Connect the free end of the white wire to a disable switch terminal. See figure 5-7

Notes:

- **The disable switch must connect to battery negative when the switch is activated.**
- **If the emitter is to be disabled by removing power, then the white wire must be left unconnected. Cut off, tape off, or insulate and secure the unused white wire.**
- **Test the switch. If the switch is connected to another wire and that wire is <u>not</u> connected to battery negative use a separate disable switch. GTT recommends a switch made by ECHLIN®[2] (Part # DJ 6402). This switch is available at NAPA®[3] Auto Parts.**

18. Make sure the other terminal of the disable switch is connected to battery negative. If you are using a separate switch, connect it to a customer-supplied white wire (16 AWG, long enough to connect to the battery negative terminal).

19. Go to Subsection 5.4, Final Wiring Connections.

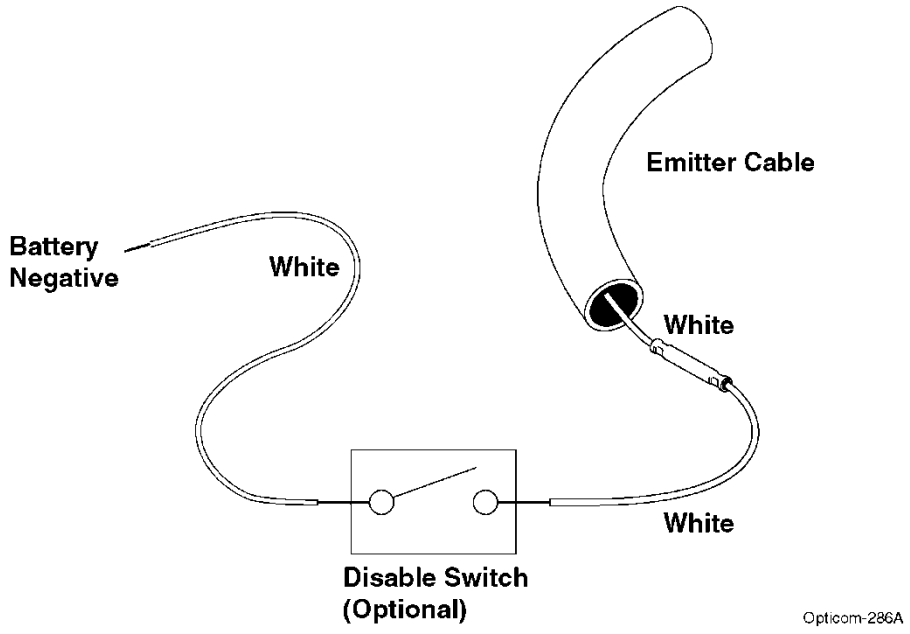

Figure 5-7. Disable Switch Wiring

[2] ECHLIN is a registered trademark of ECHLIN, Incorporated.

[3] NAPA is a registered trademark of National Automotive Parts Association.

5.3 Individual Switch Installation

This subsection describes the installation of the Model 793B emitter control switch or a customer-supplied on/off switch with an indicator lamp. It also describes how to connect the emitter cable from Model 794H, 794T and 794L emitters to the on/off switch.

Notes:

Please read and fully understand the following precautionary paragraphs before installing the emitter control switch.

- **Emitter installations may include a customer-supplied disable switch in addition to the on/off switch. The Disable feature turns off the emitter when the disable switch closes to battery negative. This feature typically uses an existing switch that indicates the presence of conditions deemed appropriate to disable the emitter. Such conditions include putting the transmission in park, setting the parking brake, or opening the vehicle operator's door. The use of a disable switch is highly recommended so that emergency vehicle drivers do not need to remember to shut off their emitter when arriving at the scene. Without using this feature, nearby intersections may be unnecessarily held in preemption by vehicles at the scene.**
- **Customer-supplied on/off switches must be rated at 24 VDC, 7 Ampere, 100,000 actuations, and must contain an internal indicator lamp (rated at +14 VDC). See Figure 5-8.**
- **The on/off switch location must be readily accessible to the vehicle operator.**
- **The on/off switch must not be in the path of airbag deployment.**
- **The emitter cable is routed between the emitter, the on/off switch, the disable switch, and the battery.**
- **Use care when drilling holes to avoid drilling into undesirable locations.**

1. Install the on/off switch at the desired location. Use the mounting bracket as a template when drilling holes.
2. Cut the emitter cable to the proper length. Remove about 6 inches of the outer jacket from the end of the cable. Be careful not to cut the wires inside.
3. Strip 1/4-inch of insulation from the black, red, and green wires. Cut off the blue, gray, and orange wires.

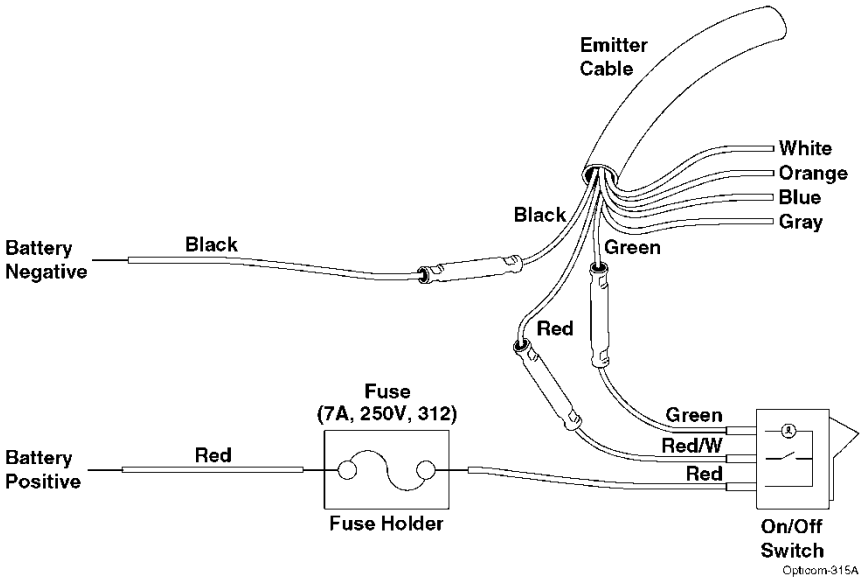

Figure 5-8. Model 793B On/Off Switch Wiring

Note: On some 793B switches, the wire listed as Red/W (red with a white stripe) will be White/Red (white with a red stripe.)

4. Insert the black wire into one end of an insulated butt splice connector and crimp. Connect the other end of the connector to a customer-supplied black wire (16 AWG, long enough to connect to the battery negative terminal). See Figure 5-8.

5. Insert the red wire from the Opticom™ Infrared System Model 794H and 794L LED Emitter cable into one end of an insulated butt splice connector and crimp. Connect the other end of the connector to the red/white wire from the on/off switch.

6. Connect the red wire from the on/off switch to the fuse holder. Connect the other end of the fuse holder to a customer-supplied red wire (16 AWG, long enough to connect to the battery positive terminal). **Do not install the fuse yet.**

7. Install the fuse rating label on the red wire near the fuse holder.

8. To install the Disable feature, continue with step 9. If the feature is not being installed, cut off the white wire and go to Subsection 5.4, Final Wiring Connections.

9. Strip 1/4-inch of insulation from the white wire and insert it into one end of an insulated butt splice connector and crimp.

10. Strip 1/4-inch of insulation from a customer-supplied white wire (16 AWG) and insert it into the unused end of the connector and crimp. Connect the free end of the white wire to a disable switch terminal. See Figure 5-9.

Notes:

- **The disable switch must connect to battery negative when the switch is activated.**
- **If the emitter is to be disabled by removing power, then the white wire must be left unconnected. Cut off, tape off, or insulate and secure the unused white wire.**
- **Test the switch. If the switch is connected to another wire and that wire is <u>not</u> connected to battery negative use a separate disable switch. GTT recommends a switch made by ECHLIN® (Part # DJ 6402). This switch is available at NAPA® Auto Parts.**

11. Make sure the other terminal of the disable switch is connected to battery negative. If you are using a separate switch, connect it to a customer-supplied white wire (16 AWG, long enough to connect to the battery negative terminal).

12. **Leave the Blue, Gray and Orange wires disconnected. Cut off, tape off, or insulate and secure these unused wires.**

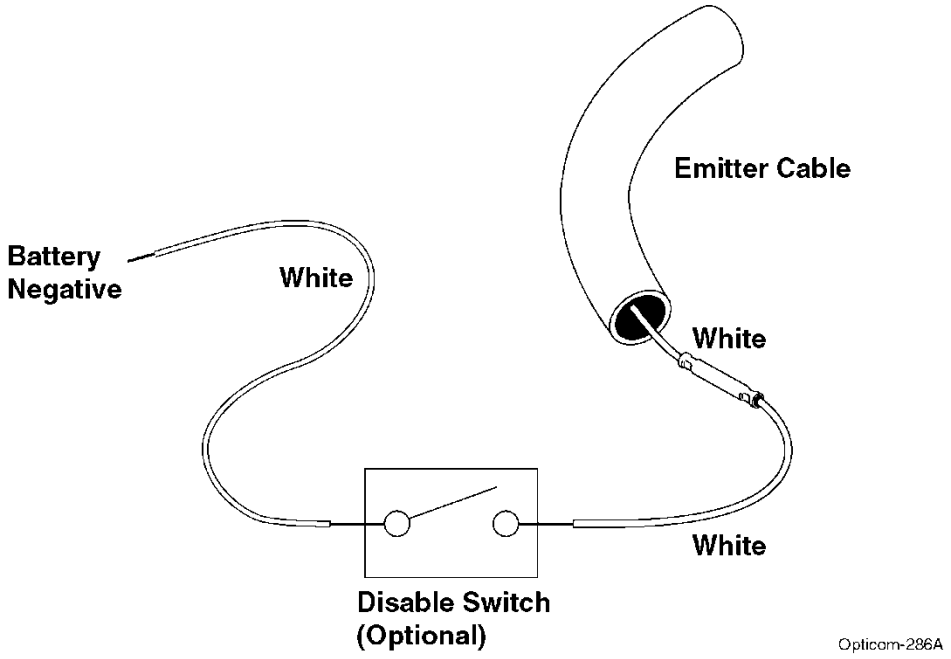

Figure 5-9. Disable Switch Wiring

5.4 Final Wiring Connections

1. **Cut off, tape off, or insulate and secure all unused wires at the end of the Model 794H, 794T and 794L emitter cable.**
2. Route the customer-supplied red, black, and white wires to the battery. (Use the white wire only when installing the Disable feature.) See Figure 5-10.

> ⚠ **CAUTION**
>
> Connecting power to a power distribution system may not offer the current capacity or protection of direct connection to the battery, which may result in damage to the equipment or vehicle. **To avoid this problem, make the power connection directly to the battery or as close to the battery as possible.** An improper power connection may result in damage to the equipment or vehicle.

Connect the black wire from the emitter cable to the battery negative (–) terminal.

3. If the optional disable switch is installed, connect the white wire from the disable switch to the battery negative (–) terminal.
4. Connect the red wire from the fuse holder to the battery positive (+) terminal.
5. Verify that the emitter control switch on/off switch is set to the OFF position.
6. Inspect all connections and verify that the wiring is complete and accurate as shown in the wiring diagrams in this installation manual.
7. Install the fuse in the fuse holder (7A, 250V, fast-acting 312 line fuse).
8. Connect the vehicle's positive battery cable, and then connect the negative battery cable.

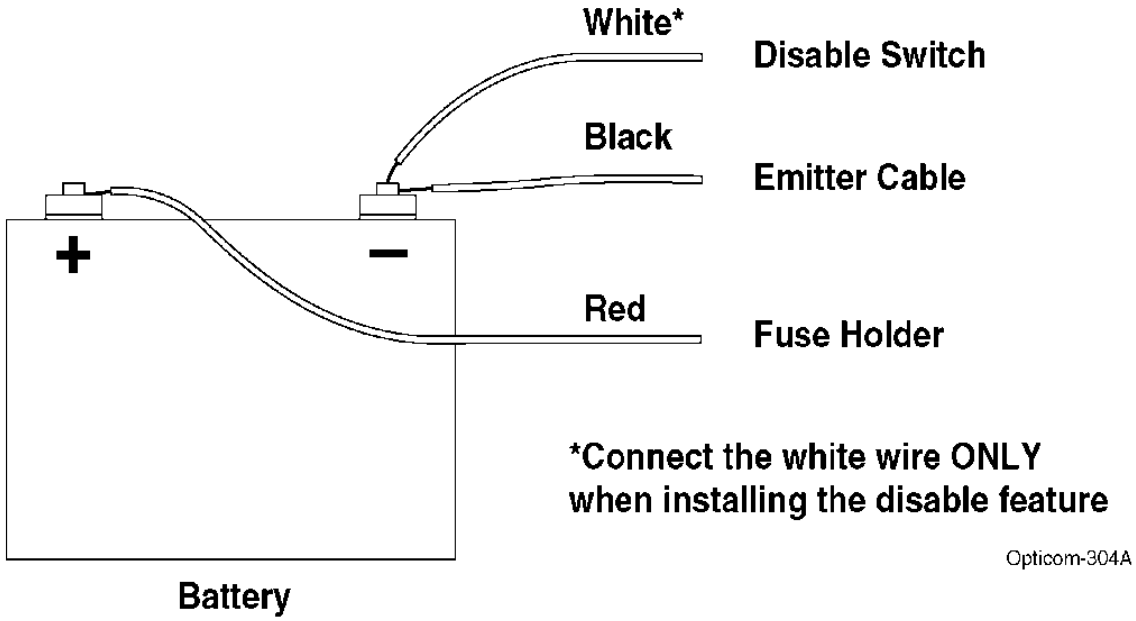

Figure 5-10. Battery Connections

5.4.1 Power Connection Recommendations

When installing Opticom™ Infrared System Model 794H, 794T and 794L LED Emitters, GTT recommends connecting the emitter directly to the vehicle battery as specified in Subsection 5.4, Final Wiring Connections.

If you are not going to connect the emitter directly to the battery, please consider the following:

- **Always utilize a 12 VDC power distribution point as close to the battery as possible. The emitter must be connected to a point that will continuously supply a minimum of 10 VDC under all operating conditions.**
- **Ensure the power source provides adequate current carrying capacity (7 amps minimum).**
- **Use insulated spade lug or butt-splice connectors to connect the emitter to the vehicle wiring.**
- **Always use the fuse supplied with the emitter.**
- **Connect the emitter's ground connection (black wire) directly to the vehicle chassis ground.**
- **Use conductive grease on the ground connection.**
- **Do <u>not</u> use insulation displacement connectors.**
- **Never connect the emitter power or ground circuit common to any life support or monitoring system.**
- **If you choose to use the lightbar switch to activate the emitter, connect the emitter's power connection to the lightbar relay output; <u>not</u> the relay coil switch.**

5.4.2 Power Connection Testing

Measure the resistance between battery ground and emitter ground using the following procedure:

1. Connect an ohmmeter (set to its lowest scale) between the battery negative (–) terminal and the emitter ground connection.
2. Measure the resistance. The resistance should be less than 1 ohm.
3. If the resistance is greater than 1 ohm, find a grounding point for the emitter that meets the requirements in step 2.

Measure the voltage to the emitter using the following procedure:

1. With the vehicle running and operating in full response mode, check the voltage using a voltmeter connected to the red (+) and black (–) wires of the emitter cable.
2. Under no circumstances should the voltage be less than 10 VDC. If it is less, find a power connection point that provides a minimum of 10 VDC for the emitter.

5.5 Emitter Cable Connector Pin Index

Table 5-1 lists the pin index for the Model 794H, 794T and 794L emitter cable connector. Figure 5-11 shows the pin view of the emitter cable connector and Figure 5-12 shows the socket view.

Table 5-1. Emitter Cable Connector Pin Index

Pin	Wire Color	Function
1	Red	+12 VDC
2	Orange	Range setting enable (input)
3	White	Disable (input)
4	Gray	J-1708 COM (-) (B)
5	Green	DC return for indicator light
6	Black	DC negative/ground/chassis
7	Blue	J-1708 COM (+) (A)

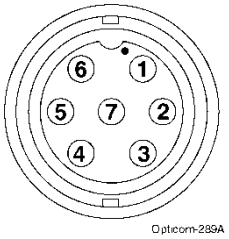

Figure 5-11. Emitter Cable Connector Pin View

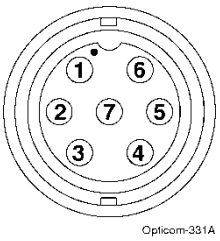

Figure 5-12. Emitter Cable Connector Socket View

<u>Do not cut off this connector. Cutting off this connector will void the warranty and prevent you from programming the emitter.</u>

5.6 Emitter programming

Program the Vehicle ID code into the Model 794H, 794T and 794L emitter using ITS Link/790-CS configuration software.

The 794H, 794T and 794L emitters may also be programmed via the RC790 Remote Coding Unit. See the RC790 manual for more details.

1. Connect the interface cable assembly to the emitter cable. See Figure 5-13.
2. Connect the interface cable RS-232 end to the programming computer.
3. Set the emitter control switch on/off switch to the ON position. The emitter should turn on.
4. Turn on the computer and start the ITS Link software program.
5. Select Opticom 790-CS.
6. Press the **Read from Device** button.
7. Double-click on the **Unit Settings** icon. When the Unit Settings window appears, set **Strobe Active** to OFF (Version 1.19 firmware and later).
8. To set the disable mode, click the mouse button on either **Latching** or **Non-Latching**.

Notes:

- **Latching mode turns the emitter off when the disable switch is activated. The emitter will not turn on again until the disable switch is deactivated and the emitter control switch is turned off for 5 seconds and then turned back on.**
- **Non-Latching mode turns the emitter off when the disable switch is activated and turns it back on when the disable switch is deactivated.**
- **See the 790-CS online help file for more details.**

9. To set the Vehicle ID code, click on **Class** in the Vehicle ID box. Then enter the predetermined vehicle class (**0** – **9**).

   Click on **ID** in the Vehicle ID box. Then enter the predetermined vehicle ID (**000** – **999**). . Numbers out of range will not be accepted.

Note:

- **Factory defaults are Class 0 and ID 001.**

10. Set the desired behavior of the visible LEDs.
11. Click the **Apply** button.
12. Exit from the configuration program.
13. Set the emitter control switch on/off switch to the OFF position.
14. Disconnect the interface cable assembly from the emitter cable and reconnect the emitter to the emitter cable (fully engage the locking ring).
15. Set the emitter control switch on/off switch to the ON position. The emitter will turn on and flash the new ID sequence.

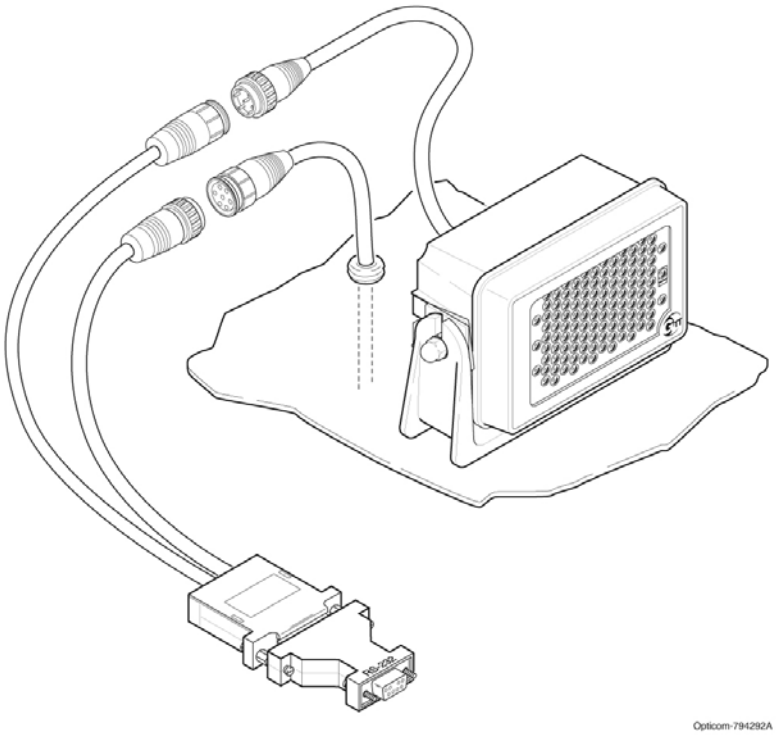

Figure 5-13. Interface Cable Assembly

6 Checkout

This section describes how to check out and test the installed system.

6.1 Installation Checkout

1. Set the on/off switch to the ON position. The Opticom™ Infrared System Model 794H, 794T and 794L LED Emitter should flash and the indicator in the on/off switch should light.

Notes:

- **The on/off switch indicator should not flash. If it does flash (about two times per second), verify that the wiring is correct. If the indicator continues to flash, substitute a known good unit. Return the defective unit for repair.**

- **Only the visible LED will be seen as flashing. The Infrared LEDs will be flashing but they are not visible. They may be viewed through a digital camera or a cell phone camera.**

2. If the disable switch is installed and the Latching Disable feature is selected, test the disable circuit by activating the switch while the emitter is on. The emitter should stop flashing and the indicator in the on/off switch should flash once about every 2 seconds (0.5 Hz).

   Deactivate the disable switch and turn the emitter off, wait 5 seconds, then turn the emitter on.

Note

- **With the Latching Disable feature selected, toggling the disable switch will not restart the emitter. The emitter will restart only after the on/off switch is set to OFF for a few seconds, then set back to ON.**

3. If the disable switch is installed and the Non-Latching Disable feature is selected, test the disable circuit by activating the switch while the emitter is on. The emitter should stop flashing and the indicator in the on/off switch should flash once about every 2 seconds (0.5 Hz).

   Deactivate the disable switch. The emitter should turn back on.

4. If the emitter does not turn off and back on as described in steps 2 and 3, check the wiring against the wiring diagram for the disable switch. For Model 793S or 793B emitter control switches, see Figure 5-9.

5. Measure the voltage to the emitter with the vehicle operating in full response mode. Check the voltage using a voltmeter connected to the red (+) and black (–) wires of the emitter cable. The voltage should not be less than 10 VDC. If it is less, find a power connection point that provides a minimum of 10 VDC for the emitter. Refer to Subsection 5.4.1, Power Connection Recommendations.

6.2 Performance Tests

⚠ WARNING

The system should ALWAYS be TESTED to verify the proper operation of the system. There are many variables in normal traffic operation and although it is not likely that the system can place an intersection into a dangerous configuration, the traffic signals should always be obeyed.

These installation instructions are the result of tests performed in our laboratory and we believe these tests to be accurate and complete. However, each installation involves variables that cannot be controlled or predicted. These variables may affect the operational characteristics of the system.

To ensure proper system operation, GTT strongly recommends that, when the system is turned on, the installer functionally tests the system using an Opticom™ Infrared system emitter-equipped vehicle. To test the system, the installer drives the priority vehicle through the intersection to verify that the system is performing in accordance with customer requirements.

7 Range Setting (Signal Intensity Threshold Level Adjustment)

To adjust the range (for any given intersection approach) using Opticom™ Infrared System Models 794H, 794T and 794L LED Emitters, refer to the *Model 752/754 Phase Selector Installation Instructions* manual. Follow the instructions that describe how to adjust the signal levels when using an emitter that does not have automated range setting capability.

Notes:

- **Clear lens strobe based emitters, visible-light filtered strobe based emitters and LED based emitters, produce slightly different signal strengths. If your system includes vehicles with a mix of these emitters, you may perceive a slight reduction in range when operating the system on older generation detectors. Operators of vehicles equipped with visible-light filtered emitters may report inadequate range or slow signal light response time.**

⚠ WARNING

A VISIBLE-LIGHT filtered strobe based emitter or an LED based emitter should be USED to set the ranges to avoid improper system operation. An improper system operation may occur if a clear lens strobe based emitter is used to set ranges. The effect of using a clear lens strobe based emitter to set ranges is a factor among many variables that may affect normal traffic operation and may adversely affect system performance.

- **If your system includes vehicles with both clear lens strobe based emitters, vehicles with visible-light filtered strobe based emitters and LED based emitters, we recommend that you set the ranges for every intersection in your system using a visible-light filtered strobe based emitter or an LED based emitter Setting (or resetting) ranges with a visible-light filtered strobe based emitter will ensure proper system performance for visible-light filtered strobe based emitters LED based** emitters and clear lens strobe based emitters.

To adjust the range using the automated range feature, you must use a Model 792R or 794R emitter and Model 793R emitter control switch.

⚠ WARNING

For proper system operation, the range and timing chart that corresponds to the model of detector that is being adjusted should always be used. The use of an incorrect range and timing chart may cause improper system operation and may adversely affect normal traffic operation; therefore, the traffic signals should always be obeyed.

8 Maintenance

Opticom™ Infrared System components are designed for reliable operation. Inspect the components at regular intervals to ensure proper system operation.

GTT recommends the following:

- Each intersection and emitter system should be inspected and tested at least every 12 months to ensure it functions to your specifications and requirements.
- Intersection systems should be tested with known good emitter systems.
- Emitter systems should be tested with known good intersection systems.
- You should develop a test plan that fits your department's operations and meets the needs of your system.
- You should keep accurate and up-to-date records of system performance and test results.

9 Troubleshooting

Four Red LEDs are Flashing rapidly, no other LEDS flashing	Infrared LEDs are not visible	View through a digital or cell phone camera
Four Red LEDS are steadily lit or flashing two times per second	Emitter has failed	Send in for repair
Four red LEDS and switch indicator light are flashing once every two seconds	Emitter is in disable mode (White wire is grounded)	Normal operation for a disabled emitter
No LEDS are flashing	Visible (red) LEDs are set to be always off or off after 10 seconds	Normal operation if the visible LEDs are configured that way.
	No power	Check voltage between red and black wires s/b 10-32 VDC
	No power, fuse blown	Replace fuse
Emitter is flashing slowly or intermittently	Insufficient voltage/current	Voltage applied must be between 10-16 VDC under all conditions. Lowest voltage typically occurs while vehicle is operating and in full response mode.
	Emitter connected to a circuit that does not supply sufficient voltage and current	Connect red and black wires directly to the battery or large power distribution point
	Poor ground	Connect black wire directly to battery or clean the area where black wire is connected to vehicle chassis.
	Unused wires touching each other.	Cut off or tape off all unused wires
	Blue or Gray wires connected	Blue and gray wire are not used in most applications
LEDs flashing but not changing the signal lights	Code needed	Determine code needed for your area and program emitter accordingly
	Orange wire connected to +12 VDC	Orange wire should only be connected to a switch with a terminal for the orange wire.
	Emitter is obstructed or misaligned	Emitter should be mounted as high as possible on the vehicle , aimed straight ahead/parallel with the road
	Detector is located poorly, misaligned, blocked or worn	Relocate, realign or replace detector, Trim trees that may be blocking detector
	Incorrect model/priority for your area	Verify model number using ITS Link/790-CS

Important Notice to Purchaser:

EXCEPT FOR THE LIMITED WARRANTIES SET FORTH IN THIS DOCUMENT, GLOBAL TRAFFIC TECHNOLOGIES (GTT) MAKES NO OTHER WARRANTIES AND EXPRESSLY DISCLAIMS ALL OTHER WARRANTIES, WHETHER EXPRESS OR IMPLIED, INCLUDING, WITHOUT LIMITATION, ANY WARRANTY AS TO MERCHANTABILITY OR FITNESS FOR A PARTICULAR USE.

GTT will, at its sole option, repair, replace or refund any amounts paid for any Opticom™ Infrared System component found to be defective in materials or manufacture within five (5) years from the date of shipment from GTT. See "Warranty and Extended Coverage" for details and limitations of the coverage plan. GTT will provide a functioning replacement component at a standard charge per unit for an additional five (5) years.

GTT warrants future system operability coverage as described herein. The warranties set forth in this document shall not apply to (A) incandescent lamps (confirmation lights) or (B) to any Opticom infrared system components which have been (1) repaired or modified by persons not authorized by GTT; (2) subjected to incorrect installation, misuse, neglect or accident; (3) damaged by extreme atmospheric or weather-related conditions; or (4) subjected to events or use outside the normal or anticipated course.

IN NO EVENT SHALL GTT BE LIABLE FOR ANY INJURY (INCLUDING, WITHOUT LIMITATION, PERSONAL INJURY), DEATH, LOSS, OR DAMAGE (INCLUDING, WITHOUT LIMITATION, PROPERTY DAMAGE), WHETHER DIRECT, INDIRECT, INCIDENTAL, SPECIAL, CONSEQUENTIAL, OR OTHERWISE, ARISING OUT OF THE USE OR INABILITY TO USE, REPAIR OR FAILURE TO REPAIR, ANY GTT PRODUCT. REGARDLESS OF THE LEGAL THEORY ASSERTED. THE REMEDIES SET FORTH IN THIS DOCUMENT ARE EXCLUSIVE.

Sale and use of the Opticom infrared system is expressly restricted to authorized agencies of government customers, within their specific jurisdictions. However, because the infrared signal generated by the Opticom infrared system is not exclusive, GTT does not warrant exclusive activation by purchaser.

Global Traffic Technologies

Global Traffic Technologies, LLC
7800 Third Street North
St. Paul, Minnesota 55128-5441
1-800-258-4610
651-789-7333
www.gtt.com

Global Traffic Technologies Canada, Inc.
157 Adelaide Street West
Suite 448
Toronto, ON M5H 4E7
Canada
1-800-258-4610

Opticom and the GTT logo mark are trademark s of
Global Traffic Technologies, LLC
Please recycle. Printed in U.S.A.
@ Global Traffic Technologies, LLC 2010
All rights reserved.
79-1000-0281-0 Rev. B